NAVY TRAINING SYSTEM PLAN

FOR THE

P-3C SERIES AIRCRAFT

N78-NTSP-A-50-8112C/A

APRIL 2003

P-3C SERIES AIRCRAFT

EXECUTIVE SUMMARY

This Navy Training System Plan has been developed to identify the manpower, personnel, and training requirements necessary to support the P-3C Orion Program, and focuses on the primary P-3C Aircraft (the Update III) and its variations, including the Aircraft Improvement Program, the Block Mod Upgrade Program, and the Counter Drug Update aircraft configuration.

The P-3C Update III was introduced to the fleet in early 1985 and achieved Initial Operating Capability in 1986. Currently the aircraft is in the Operations and Support phase of the Defense Acquisition System.

Multiple mission requirements driven by geopolitical dynamics have dictated that the P-3C Aircraft adapt to the increasingly hostile and technologically advanced character of its operating environment. Improvements in recent years have significantly increased mission capabilities. With many P-3Cs approaching the end of their service life, the Navy must manage sustainment and modernization efforts while searching for a replacement aircraft.

Maintenance concepts for the P-3C Series Aircraft are based on the Naval Aviation Maintenance Program, Office of the Chief of Naval Operations (OPNAV) Instruction 4790.2 series, which details the three levels of maintenance employed by fleet VP squadrons. Organizational level maintenance is performed by personnel from aviation maintenance ratings with Navy Enlisted Classifications (NEC) 8319 or 8819. Additionally, NEC 6719 has been approved to reflect P-3C Update III AIP-peculiar avionics skills required at the organizational level and NEC 9402 has been approved for the P-3C Update III AIP In-Flight Technician (IFT). Intermediate level maintenance is performed by personnel from various aviation maintenance ratings with applicable NECs. Depot level maintenance is performed by personnel at the Naval Aviation Depot Jacksonville, Florida.

Future P-3C Aircraft maintenance procedures will employ the Integrated Maintenance Concept (IMC) applying Reliability Centered Maintenance principles that change the focus from restoration maintenance to prevention maintenance. No target implementation date has been established for the P-3C Aircraft to begin the IMC.

Training has evolved into a complex system involving continual upgrades to existing curricula and Training Devices in order to support all current P-3C configurations. The use of Computer-Based Training to address human performance shortfalls associated with limited aircraft-upgrade kit procurements is outlined in this document. Recent upgrades to the aircraft should not cause any quantitative changes in manpower requirements at the squadron level, but may drive an increase in NEC 9502 instructor billets due to the additional course requirements as

well as an increase in AO 8301 billets assigned to Weapons Departments at Naval Air Stations from which SLAM ER equipped P-3Cs operate (both home base and deployed sites).

Aircrew training is provided by the Fleet Readiness Squadron, VP-30, at Naval Air Station (NAS) Jacksonville, Florida. Traditionally, pipeline P-3C avionics maintenance training for IFTs was conducted at Naval Air Maintenance Training Units (NAMTRAU) alongside non-aircrew students, prior to the IFTs beginning observer qualification and in-flight training at VP-30. In recent years, IFT avionics maintenance training in its entirety had migrated to VP-30, but the non-flight related portion of their training is now anticipated to return to NAMTRAU.

Follow-on training for personnel performing organizational and intermediate level maintenance is available at Maintenance Training Unit (MTU) 1011 NAMTRAU Jacksonville, Florida, and MTU 1012 NAMTRAU Whidbey Island, Washington. The exception to this is P-3C AIP peculiar transition training, which is currently conducted at NAS Patuxent River, Maryland, by instructors visiting from MTU 1011. Until an AIP Trainer is built for MTU 1011 or MTU 1012, both instructors and students are sent to NAS Patuxent River in order to receive AIP Weapons System Technician (WST) training (NEC 6719).

Due to the rapid advancement in electronics, computing, and weapons systems technologies, the P-3C AIP is the aircraft of choice over the Update III for over eighty percent of operational missions. In the past, managers have been confronted with an undesirable shortage of AIP trained technicians; however, that situation is improving.

At an AIP maintenance summit held in February 2002 at NAMTRAU Jacksonville, the fleet expressed the need to have all P-3 Avionics WSTs and IFTs trained to hold the newer 6719 and 9402 NECs (P-3C AIP WST and IFT, respectively) vice the older 8319 and 8262 NECs (Update III WST and IFT). These new NECs have been implemented and are being phased into activity manning documents. All active duty squadrons now have AIP (vice Update III) IFT billets and AT 8319 billets are now being incrementally converted into AT 6719 billets, beginning with VP-30 and all East Coast active duty squadrons.

One or more AIP Integrated Maintenance Trainers (IAT) is urgently required in order to better instruct ground avionics maintenance and IFT personnel on P-3C AIP specific systems. Currently, planning is underway to install the first AIP IAT at MTU 1011 NAMTRAU Jacksonville during FY03. This will be a new IAT and not a modification of the existing Update III IAT. If both the East and West Coast schoolhouses are to provide parallel P-3C AIP training pipelines (as they do for P-3C Update III maintenance), then MTU 1012 NAMTRAU Whidbey Island will also need an IAT.

P-3C SERIES AIRCRAFT

Limited additional maintenance refresher training will also be conducted as required at NAS Brunswick, Maine; Marine Corps Base Kaneohe Bay, Hawaii; and NAS Whidbey Island, Washington.

P-3C SERIES AIRCRAFT

TABLE OF CONTENTS

	Page
Executive Summary	i
List of Acronyms	v
Preface	xii
PART I - TECHNICAL PROGRAM DATA	
A. Nomenclature-Title-Program	I-1
B. Security Classification	I-1
C. Manpower, Personnel, and Training Principals	I-1
D. System Description	I-2
E. Developmental Test and Operational Test	I-3
F. Aircraft and/or Equipment/System/Subsystem Replaced	I-4
G. Description of New Development	I-10
H. Concepts	I-24
1. Operational	I-24
2. Maintenance	I-25
3. Manning	I-32
4. Training	I-34
I. Onboard (In-Service) Training	I-96
J. Logistics Support	I-99
K. Schedules	I-102
L. Government-Furnished Equipment and Contractor-Furnished Equipment Training Requirements	I-106
M. Related NTSPs and Other Applicable Documents	I-106
PART II - BILLET AND PERSONNEL REQUIREMENTS	II-1
PART III - TRAINING REQUIREMENTS	III-1
PART IV - TRAINING LOGISTICS SUPPORT REQUIREMENTS	IV-1
PART V - MPT MILESTONES	V-1
PART VI - DECISION ITEMS/ACTION REQUIRED	VI-1
PART VII - POINTS OF CONTACT	VII-1

P-3C SERIES AIRCRAFT

LIST OF ACRONYMS

ACPA	Adaptive Controlled Phased Array
AD	Aviation Machinist's Mate
ADR	Acoustic Data Recorder
AE	Aviation Electrician's Mate
AFC	Airframes Change
AFCM	Master Chief Aircraft Maintenanceman
AFCS	Automatic Flight Control System
AIMS	Advanced Imaging Multi-spectral Sensor
AIP	Aircraft Improvement Program
AM	Aviation Structural Mechanic
AME	Aviation Structural Mechanic (Safety Equipment)
AMH	Aviation Structural Mechanic (Hydraulics)
AMLCD	Active Matrix Liquid Crystal Display
AMTCS	Aviation Maintenance Training Continuum System
ANDVT	Airborne Narrow-band Digital Voice Terminal
ANVIS	Aviators Night Vision Imaging System
AO	Aviation Ordnanceman
AOB	Average Onboard
APTT	Acoustic Part Task Trainer
APU	Auxiliary Power Unit
ARIES	Airborne Reconnaissance Integrated Electronics Suite
ASCL	Advanced Sonobuoy Communications Link
ASE	Aircraft Survivability Equipment
ASSG	Acoustic Signal Sound Generator
ASUW	Anti-Surface Warfare
ASW	Anti-Submarine Warfare
AT	Aviation Electronics Technician
ATIR	Annual Training Input Requirement
ATSG	Acoustic Test Signal Generator
AVC	Avionics Change
AVCM	Master Chief Avionics Technician
AW	Aviation Warfare Systems Operator
BIT	Built-In Test
BMUP	Block Modification Upgrade Program
BT	Bathythermograph

P-3C SERIES AIRCRAFT

LIST OF ACRONYMS

C^4ISR	Command, Control, Communications, Computers, Intelligence, Surveillance, and Reconnaissance
CAI	Computer Aided Instruction
CAPS	Computer-Aided Pointing System
CBT	Computer-Based Training
CCA	Common Configuration Aircraft
CDNU	Control Display Navigation Unit
CDU	Counter Drug Upgrade
CETS	Contractor Engineering and Technical Services
CFE	Contractor Furnished Equipment
CFT	Cockpit Familiarization Trainer
CHEX	Channel Expansion
CHRD	Color High Resolution Display
CIN	Course Identification Number
CIP	Communications Improvement Program
CMDS	Countermeasures Dispensing System
CMEP	Commandable Manual Entry Panel
CNATT	Center for Naval Aviation Technical Training
CNO	Chief of Naval Operations
COMLANTFLT	Commander in Chief, Atlantic Fleet
COMNAVAIRESFOR	Commander, Naval Air Reserve Force
COMPACFLT	Commander in Chief, Pacific Fleet
COTS	Commercial Off-The-Shelf
CPRWL	Commander, Patrol Reconnaissance Wing Atlantic
CPT	Cockpit Procedures Trainer
DA	Developing Agency
DAB	Defense Acquisition Board
DAMA	Demand Assigned Multiple Access
DCFE	Directed Contractor Furnished Equipment
DCU	Display Control Unit
DEP	Data Entry Panel
DF	Direction Finding
DFQS	Digital Fuel Quantity System
DIFAR	Directional Low-Frequency Analyzing and Recording
DMTS	Digital Magnetic Tape System
ECP	Engineering Change Proposal

P-3C SERIES AIRCRAFT

LIST OF ACRONYMS

ECS	Environmental Control System
EER	Extended Echo Ranging
EFDS	Electronic Flight Display System
ELCID	Enhanced Limited Combat Identification
EO	Electro-Optical
EOSS	Electro-Optical Sensor System
ESEI	Enhanced Specific Emitter Identification
ESM	Electronic Support Measures
EW	Electronic Warfare
FASOTRAGRU DET	Fleet Aviation Specialized Operational Training Group Detachment
FDI	Flight Display Indicator
FE	Flight Engineer
FFP	Firm Fixed Price
FIT	Fleet Introduction Team
FMS	Foreign Military Sales
FOT&E	Follow-on Operational Test and Evaluation
FPT	Fleet Project Team
FRS	Fleet Readiness Squadron
FTC	Fleet Training Center
FY	Fiscal Year
GFE	Government Furnished Equipment
GPS	Global Positioning System
HACLCS	Harpoon Airborne Command and Launch Control System
HCR	Hard Copy Recorder
HF	High Frequency
HQ	Have Quick
HSI_1	Horizontal Situation Indicator
HSI_2	Human Systems Integration
IAT	Integrated Avionics Trainer
ICW	Interactive Courseware
IFF	Identification Friend or Foe
IFT	In-Flight Technician
ILSP	Integrated Logistics Support Plan
IMA	Intermediate Maintenance Activity

P-3C SERIES AIRCRAFT

LIST OF ACRONYMS

I-O	Input-Output
IR	Infrared
IRDS	Infrared Detecting Set
IRIX 6.5	Silicon Graphics, Inc. 5th Generation 64-Bit UNIX Operating System
ISAR	Inverse Synthetic Aperture Radar
ISIS	Isochronal Scheduled Inspection System
kHz	Kilohertz
LMAC	Lockheed Martin Aeronautics Company
LMTDS	Lockheed Martin Tactical Defense Systems
LSI	Logistics Services International
MAD	Magnetic Anomaly Detection
MATT	Multi-Mission Advanced Tactical Terminal
MCB	Marine Corps Base
Mini-DAMA	Miniaturized-Demand Assigned Multiple Access
Mini-IAT	Mini-Integrated Avionics Trainer
MIP	Modification/Installation Program
MK	Mark
MMH/FH	Maintenance Man-Hours per Flight Hour
MPA	Maritime Patrol Aviation
MPD	Multi-Purpose Display
MPT	Manpower, Personnel, and Training
MSD	Material Support Date
MTIP	Maintenance Training Improvement Program
MTT	Magnetic Tape Transport
MTU	Maintenance Training Unit
MWS	Missile Warning System
NA	Not Applicable
NAMTRAU	Naval Air Maintenance Training Unit
NAS	Naval Air Station
NATEC	Naval Air Technical Data and Engineering Service Command
NATOPS	Naval Air Training and Operating Procedures Standardization
NAVAIR	Naval Air Systems Command
NAV-COMM	Navigation-Communication

P-3C SERIES AIRCRAFT

LIST OF ACRONYMS

NAVCOM/TACCO	Navigator Communicator/Tactical Coordinator
NAVPERSCOM	Navy Personnel Command
NAWCAD	Naval Air Warfare Center Aircraft Division
NDI	Non-Developmental Item
NEC	Navy Enlisted Classification
NETC	Naval Education and Training Command
NFO	Naval Flight Officer
NOBC	Naval Officer Billet Code
NS	Naval Station
NSD	Navy Support Date
NSWC	Naval Surface Warfare/Weapons Center
NTMPS	Navy Training Management and Planning System
NTSP	Navy Training System Plan
NUD	Non-Update
OASIS	Over-the-Horizon Airborne Sensor Information System
OFT	Operational Flight Trainer
OPEVAL	Operational Evaluation
OPNAV	Office of the Chief of Naval Operations
OPNAVINST	Office of the Chief of Naval Operations Instruction
OPO	OPNAV Principal Official
OT&E	Operational Test and Evaluation
OTCIXS	Officer in Tactical Command Information Exchange System
OTH-T	Over-The-Horizon-Targeting
OTPI	On-Top Position Indicator
P^3I	Pre-Planned Product Improvement
PATWING	Patrol Wing
PCHRD	Pilot Color High Resolution Display
PCO	Prospective Commanding Officer
PEP	Programmable Entry Panel
PMA	Program Manager, Air
PT	Precision Targeting
PXO	Prospective Executive Officer
RDSS	Replacement Data Storage System
RF	Radio Frequency
RFT	Ready For Training

P-3C SERIES AIRCRAFT

LIST OF ACRONYMS

RINU	Replacement Inertial Navigation Unit
RORO	Roll On-Roll Off
RSC	Radio Set Control
SAR	Synthetic Aperture Radar
SARP	Sustained Aircraft Recovery Program
SASP	Single Advanced Signal Processor
SATCOM	Satellite Communications
SEI	Specific Emitter Identification
SELRES	Selected Reserve
SLAM	Standoff Land-Attack Missile
SLAM ER	Standoff Land-Attack Missile Expanded Response
SLAM ER ATA	Standoff Land-Attack Missile Expanded Response Automatic Target Acquisition
SLAP	Service-Life Assessment Program
SLEP	Service Life Extension Program
SRA	Shop Replaceable Assembly
SRP	Sustained Readiness Program
SRS	Sonobuoy Reference System
SS	Sensor Station
SSIP	Sensor Station Improvement Program
TA	Training Agency
TACAN	Tactical Air Navigation
TACCO	Tactical Coordinator
TACT	Tactical Aircrew Coordination Trainer
TADIXS	Tactical Data Information Exchange Subsystem
TAR	Training and Administration of the Naval Reserves
TBD	To Be Determined
TCCD	Training Course Control Document
TD	Training Device
TDP	Tactical Data Processor
TECHEVAL	Technical Evaluation
TFFMS	Total Force Manpower Management System
TMS	Tactical Mission Software
TORT	Tactical Operational Readiness Trainer
TRAP	Tactical Related Approach
TSA	Training Support Agency

P-3C SERIES AIRCRAFT

LIST OF ACRONYMS

TTE	Technical Training Equipment
UHF	Ultra High Frequency
VHF	Very High Frequency
VME	Virtual Machine Environment
VP	Patrol Squadron
VX	Air Test and Evaluation Squadron
WILC	Wing Interactive Learning Center
WRA	Weapon Replaceable Assembly
WST_1	Weapon System Technician
WST_2	Weapon System Trainer
WTU	Weapons Tactics Unit

P-3C SERIES AIRCRAFT

PREFACE

This Approved Navy Training System Plan (NTSP) for the P-3C Series Aircraft was developed to update the Draft NTSP for the P-3C Series Aircraft NTSP (A-50-8112C/D) dated August 2001. This NTSP was developed in accordance with the guidelines set forth in the Navy Training Requirements Documentation Manual, Office of the Chief of Naval Operations (OPNAV) Publication P-751-1-9-97.

This revision was accomplished by a thorough review of the life cycle Manpower, Personnel, and Training (MPT) requirements associated with the P-3C Series Aircraft and updates the delivery schedules, billet and personnel requirements, training requirements, training logistics support requirements, milestones, and points of contact.

Substantial revision of the activity manpower requirements and training course information has been initiated and will continue to be updated in succeeding iterations of the NTSP. Recent changes to AT 6719 and AT 9402 manning have been incorporated.

Throughout the entire document, the phrase “Aircraft Improvement Program” has replaced “Anti-Surface Warfare Improvement Program” or “ASUW Improvement Program.” Furthermore, the definition of the acronym “AIP” stands for “Aircraft Improvement Program,” no matter what earlier versions may have been.

Though there is commonality between P-3C and EP-3E airframes, multiple aircraft systems, and sustainment efforts, documentation for the EP-3E and its variants (including the Airborne Reconnaissance Integrated Electronics Suite II (ARIES II) Sensor Station Improvement Program (SSIP)) will continue to be maintained in a separate NTSP.

In accordance with Chief of Naval Operations (CNO) Message 211908Z JUN 00, the Aviation Structural Mechanic - Structures and Aviation Structural Mechanic - Hydraulics ratings merged to form the Aviation Structural Mechanic (AM) rating as of 1 March 2001. The manpower depicted in this NTSP no longer identifies AMH and AMS as separate ratings. Similarly, the Storekeeper (SK)-Aviation Storekeeper (AK) rating merger is ongoing, and E-7 and above AK billets have been converted to SK billets. Manpower data was updated from the Total Force Manpower System in March 2002 and from Naval Training Management and Planning System in July 2002.

This version also incorporates a large number of fleet comments.

Note: AO (P-3 In-flight Ordnanceman), Navy Enlisted Classification (NEC) 8271 is restricted to reservists only.

PART I - TECHNICAL PROGRAM DATA

A. NOMENCLATURE-TITLE-PROGRAM

1. **Nomenclature-Title-Acronym.** P-3C Update III Aircraft

2. **Program Element.** 24251N

B. SECURITY CLASSIFICATION

1. **System Characteristics** ..... Secret
2. **Description** ..... Unclassified
3. **Selected Avionics** ..... Confidential

C. MANPOWER, PERSONNEL, AND TRAINING PRINCIPALS

OPNAV Principal Official (OPO) Program Sponsor ..... CNO (N780E1)

OPO Resource Sponsor..... CNO (N780E1)

Functional Mission Sponsor ..... CNO (N780E1)

Developing Agency ..... NAVAIR (PMA290)

Training Agency (TA) ..... COMLANTFLT
COMPACFLT
NETC

Training Support Agency (TSA) ..... NAVAIR (PMA205)
COMNAVAIRESFOR

Manpower and Personnel Mission Sponsor..... CNO (N12)
NAVPERSCOM (PERS-4, PERS-404)

Director of Naval Education and Training ..... CNO (N795)

Commander, Reserve Program Manager..... COMNAVAIRESFOR (N35)

D. SYSTEM DESCRIPTION

1. Operational Uses

a. General. The P-3C Orion is a land-based, four-engine, turboprop, maritime patrol aircraft. Its size, range, advanced equipment, and highly skilled 11-man aircrew of five officers and six enlisted personnel enable it to support a wide range of missions. It provides effective Anti-Submarine Warfare (ASW), Anti-Surface Warfare (ASUW), and Command, Control, Communications, Computers, Intelligence, Surveillance, and Reconnaissance (C^4ISR) capabilities to U.S. Naval and Joint Commanders. Exploitation of the P-3C unique C^4ISR capabilities can provide dominant battlespace awareness through the interactive "picture" it provides for a more accurate assessment of friendly and enemy operations within the area of interest.

Information obtained from advanced sensor systems is combined with highly accurate navigational data by state-of-the art tactical data processing equipment and then relayed via secure communication paths according to mission requirements. Sophisticated over-the-horizon radar, electronic surveillance/countermeasures systems, and missile warning systems alert the crew to threats while jamming and other countermeasures-dispensing systems provide self-protection and enhance survivability. With the addition of the Maverick and the Standoff Land-Attack (SLAM) and, even more recently, the Standoff Land-Attack Expanded Response (SLAM ER) missiles to its existing ordnance inventory, the P-3C has gained surgical strike capability against high-value, fixed land targets, ships in port, or ships at sea.

Mission assignments may include: peacekeeping and relief missions; emergency personnel evacuation; search and rescue; intelligence, surveillance, and reconnaissance (ISR); datalink, counter-drug operations, and shipping embargo enforcement; mining and denial of free passage; littoral ("brown water") and deepwater ASW; combat surveillance, carrier group protection, and troop support/ground attack; and stand-off land attack.

b. Mission Assets. The current force of 12 Active Duty and seven Reserve Maritime Patrol Aviation (MPA) squadrons partially supports theater and fleet commanders' requirements for 51 continuously forward-deployed P-3Cs by providing 40 deployed aircraft. Each Active Duty squadron has nine aircraft (squadrons based at Marine Corps Base (MCB) Kaneohe, Hawaii, have ten) and is manned by approximately 60 officers and 250 enlisted personnel. The seven Reserve squadrons have six aircraft each. MPA squadrons deploy to sites outside the United States for approximately six months, and generally spend one year training at home between deployments.

2. Operational Aircraft Configurations. This Navy Training System Plan focuses on the primary P-3C Aircraft, the Update III, and its principle variants: the Aircraft Improvement Program (AIP) Aircraft, the Block Mod Upgrade Program (BMUP) Aircraft, and the Counter Drug Upgrade (CDU) Aircraft.

a. P-3C Update III. The P-3C Update III Aircraft is a land-based, long-range, fixed-wing, maritime surveillance patrol aircraft primarily designed for ASW, ASUW, Independent Ocean Shipping Surveillance, and Search and Rescue.

b. P-3C Aircraft Improvement Program. The P-3C AIP is a land-based, long-range, maritime surveillance aircraft primarily designed for ASUW, ASW, Independent Ocean Shipping Surveillance, and Search and Rescue. The P-3C AIP configuration surpasses the standard P-3C Update III package and provides improved survivability, Over the Horizon-Tracking (OTH-T), and C^4ISR to theater commanders.

c. P-3C Block Modification Upgrade Program. The P-3C BMUP is a land-based, long-range, maritime surveillance aircraft primarily designed for ASW, ASUW, Independent Ocean Shipping Surveillance, and Search and Rescue. The BMUP addresses parts obsolescence and provides for conversion of Update II and II.5 Aircraft to a representative or Common Configuration Aircraft (CCA) P-3C Update III configuration. Initial Operational Capability is currently scheduled for March 2002.

d. P-3C Counter Drug Upgrade. The P-3C CDU is a land-based, long-range, maritime surveillance aircraft primarily designed for ASW, ASUW, Independent Ocean Shipping Surveillance, and Search and Rescue. This configuration satisfies special counter drug program requirements for enhanced surveillance, communications, and surface search capabilities.

3. Foreign Military Sales. For information concerning Foreign Military Sales (FMS) of all configurations of P-3C Aircraft, contact Program Manager, Air (PMA) 290, Code PMA290F.

E. DEVELOPMENTAL TEST AND OPERATIONAL TEST

1. P-3C Update III. Technical Evaluation (TECHEVAL) for the P-3C Update III Aircraft began in March 1981 and was completed in second quarter Fiscal Year (FY) 82. Air Test and Evaluation Squadron Twenty (VX-20) [formerly Force Warfare Test Directorate], Naval Air Test Center Patuxent River, Maryland, conducted the TECHEVAL. (The Naval Air Test Center is now the Naval Air Warfare Center Aircraft Division (NAWCAD) Patuxent River.)

VX-1 conducted Operational Test and Evaluation (OT&E) of the P-3C Update III Aircraft at the Naval Air Test Center Patuxent River, from September 1981 through January 1982. Provisional approval for service use was granted in July 1982. Approval for full production was received in January 1986 after completion of Follow-on Operational Test and Evaluation (FOT&E).

The Update III Program was enhanced by a Channel Expansion (CHEX) Program that doubled the number of prosecutable sonobuoy channels; CHEX has been installed in all P-3C Update III Aircraft. The CHEX Program began in 1983 and the first tested aircraft was delivered in April 1986. CHEX TECHEVAL was accomplished from March through June 1988.

The Update III Program introduced changes to the P-3C data processing capabilities, eventually replacing the AN/ASQ-114 CP-901(V) Computer System and associated logic unit interfaces and signal data converter with the AN/ASQ-214/CP-2044 system. TECHEVAL for the CP-2044 was conducted by VX-20 at NAWCAD Patuxent River, beginning in September

1992 and ending in February 1994. Operational Evaluation (OPEVAL) was conducted by VX-1 upon completion of the Tactical Mission Software conversion to the Ada programming language in March 1995.

2. P-3C Aircraft Improvement Program. FOT&E was conducted from January 1997 to December 1997 by VX-20 and VX-1 personnel at NAWCAD Patuxent River. Additional testing is ongoing.

The P-3C AIP Aircraft reliability and performance was improved with the replacement of the AN/AVX-1 Electro-Optical System with the AN/ASX-4 Advanced Imaging Multi-spectral Sensor (AIMS). A combined TECHEVAL and OPEVAL for the AN/ASX-4 AIMS was conducted by the VX-20 and VX-1 in January 1999 and was completed in July 1999.

3. P-3C Block Modification Upgrade Program. VX-20 and VX-1 personnel at NAWCAD Patuxent River conducted DT and OT. DT was conducted beginning in February 2001 and was completed in May 2002. The DT/OT Transition report was approved 21 May 2002. OT began in June 2002 and was completed in the first half of September 2002. The report is pending.

4. P-3C Counter Drug Upgrade. FOT&E was completed in January 1998 by VX-20 personnel at NAWCAD Patuxent River.

F. AIRCRAFT AND/OR EQUIPMENT/SYSTEM/SUBSYSTEM REPLACED

1. P-3C Update III. The production P-3C Update III Aircraft related new and replaced systems include:

NEW	**REPLACED**
Electronic Flight Display System (EFDS) *	AN/AJN-15 Flight Director Indicator (FDI) Group and Horizontal Situation Indicator (HSI) Group
Digital Fuel Quantity System (DFQS) *	Analog Gauges
AN/ASN-179 Replacement Inertial Navigation Unit (RINU) *	LTN-72 Inertial Navigation Unit
AN/ARN-151(V)1 Global Positioning System (GPS) *	None
GPS Control Display Navigation Unit (CDNU) *	None
AN/APN-227 Doppler Radar Navigation Set	AN/APN-187 Doppler Radar Navigation Set **Note:** Doppler Radar systems are de-configured.

NEW	REPLACED
AN/ARN-140 VOR/ILS Radio Navigation Set	AN/ARC-101 VOR Receiver AN/ARN-87 Converter, ILS Receiver
AN/ARC-187 Ultra High Frequency Radio Set	AN/ARC-143 Ultra High Frequency (UHF) Radio
Batwing Antenna, Satellite Communications (SATCOM) Panel	None
AN/ARC-197 Very High Frequency (VHF)/UHF Radio Set	AN/ARC-101 VHF Radio
KG-84 Communications Improvement Program	None
Communications Improvement Program (CIP) Interface Device Adaptor Assembly (IDAA) and SATCOM Diplexer *	SATCOM Panel
AN/ASQ-212 Digital Computer Set CP-2044/ASQ-212	AN/ASQ-114(V) Digital Computer Set CP-901(V)/ASQ-114(V) CV-2461A/A Signal Data Converter AYA-8 Logic Units or OL-337(V)/AY Modernized Logic Units (MLU)
AN/ASH-33/33A Digital Magnetic Tape Set (DMTS)	RD-319A/AYA Magnetic Tape Transport (MTT)
SG-1156/A Acoustic Test Signal Generator (ATSG)	SG-791/ARR-72(V) Acoustic Sensor Signal Generator (ASSG) or SG-1009/ASA-76 Reference Signal Generator
AN/ALQ-158(V) Adaptive Controlled Phased Array (ACPA) System	AN/ARR-72(V) VHF Blade Antenna and Radio Frequency (RF) Preamplifier
AN/ARR-78(V)1 Advanced Sonobuoy Communications Link (ASCL)	AN/ARR-72(V) Sonobuoy Receiver System R-1651/AN/ARA-50 On Top Position Indicator (OPTI) Receiver
AN/AQH-4A(V)2 Sono Recorder	AN/AQH-1(V) and AN/AQH-4 Sono Recorder

NEW	REPLACED
AN/UYS-1(V) Single Advanced Signal Processor System (SASP) and Display and Control Unit (DCU): AN/USQ-78 CP-1808/USQ-78(V) or AN/USQ-78A CP-2331/USQ-78(V)	AN/AQA-7(V)5 Command Activated Sonobuoy System/Directional Low-Frequency Analyzing and Recording (DIFAR) Sonar Computer-Recorder Group or AN/AQA-7(V)12 Localizer DIFAR/Command Activated Sonobuoy System Sonar Computer-Recorder Group C-9157 AN/ASA-76(V) Command Activated Sonobuoy System Reference Signal Generator Control AN/ASQ-36 Bathythermograph (BT) ID-1872A/A Ambient Sea Noise Meter
AN/ARS-5 Sonobuoy Reference System (SRS)	AN/ARS-3 SRS
AN/ALR-66B(V)3 Electronic Support Measures (ESM) Set	AN/ALQ-78(V) or AN/ALR-66A(V)

* Subsequent improvements or enhancements to the original Update III modification.

Note: Those aircraft selected for AFC 603 have EFDS installed to replace the AN/AJN-15 FDI and HSI Group(s).

2. P-3C Aircraft Improvement Program. The baseline production P-3C AIP Aircraft-related new and replaced systems are:

NEW	REPLACED
GPS Antenna	None
Batwing Antenna-Combiner	None
UHF SATCOM Antenna and Radio Frequency (RF) Plate	None
AN/USC-43(V)3 Airborne Narrow-band Digital Voice Terminal (ANDVT)	None
OZ-72(V) Multi-Mission Advanced Tactical Terminal (MATT)	None

NEW	REPLACED
AN/USC-42(V)3 Miniaturized-Demand Assigned Multiple Access (Mini-DAMA) Communications Set	None
AN/AIC-41 Intercommunications Set	AN/AIC-22
AN/ASQ-222 Digital Computer Set CP-2339/ASQ-222	AN/ASQ-212 Digital Computer Set CP-2044/ASQ-212
Replacement Data Storage System (RDSS)	AN/ASH-33
Color High Resolution Display (CHRD)	AN/ASA-70 IP-91x
Pilot Color High Resolution Display (PCHRD)	AN/ASA-66 IP-886
Hard Copy Recorder (HCR)	AGC-6 High Speed Printer
AN/APS-137B(V)5 Synthetic Aperture Radar (SAR)/Inverse Synthetic Aperture Radar (ISAR)	AN/APS-115
Advanced Imaging Multi-spectral Sensor (AIMS) ASX-4	AN/AVX-1 and AN/AAS-36A
Over-the-Horizon Airborne Sensor Information System (OASIS) III	None
Optical Window with Defogger	None
AN/ALR-66C(V)3 ESM Set	AN/ALR-66B(V)3
EP-2060 Pulse Analyzer	Parts of AN/ULQ-16 Pulse Analyzer firmware/hardware
AS-105 ESM Direction Finding (DF) Antenna	None
AN/AAR-47 Missile Warning System (MWS)	None
AN/ALE-47 Countermeasures Dispenser System	None

NEW	REPLACED
AGM-65F Infrared (IR) Maverick Missile System	None
AGM-84E SLAM/AGM-84H SLAM ER	None

a. Explosive Suppressant Foam. Explosive suppressant foam will be installed in all P-3C AIP and IR Maverick modified aircraft. Aircraft incorporating Airframes Change (AFC)-517 have explosion suppressant foam installed in the four integral wing tanks. The fuel cell foam is a fully reticulated fire screen designed to prevent fuel tank explosions caused by tracers or high explosive incendiary rounds, thereby igniting oxygen-rich fuel vapors. The foam adheres to fuel droplets in order to keep the fuel cell cavity too fuel rich to support combustion.

b. Pre-Planned Product Improvement. A Pre-Planned Product Improvement (P^3I) effort for the AIP will take place incrementally as funding becomes available. Current funding has incorporated the following improvements into the baseline P-3C AIP Aircraft:

(1) Basic Color. Color capability was implemented at the Tactical Coordinator (TACCO), Navigation-Communications (NAV-COMM), and Sensor Station (SS)-3 positions as well as the PCHRD. Color capability was implemented with software build A4.7A1. (A "build" for software is similar to an Engineering Change Proposal (ECP) for hardware.)

(2) Navigation-Communication Functionality. Software improvements increased NAV-COMM functionality by incorporating a workload sharing capability between the TACCO and NAV-COMM stations. NAV-COMM functionality was implemented with software build A4.7A1.

(3) Early Limited Combat Identification. The Enhanced Limited Combat Identification (ELCID) updates the AN/APS-137B(V)5 Radar to extend the range from which the SAR mode can provide imagery and add Precision Targeting (PT) capability.

(4) Specific Emitter Identification. The Specific Emitter Identification (SEI) system provides additional Electronic Warfare (EW) pulse processing capability in addition to the AN/ALR-66C(V)3. SEI will replace EP-2060.

(5) Enhanced Specific Emitter Identification. The Enhanced Specific Emitter Identification (ESEI) system is a follow-on effort to SEI and will replace the AN/ALR-66C(V)3.

(6) Advanced Imaging Multi-spectral Sensor. The AIMS replaces the AN/AVX-1 Electro-Optical Sensor System (EOSS) and AN/AAS-36A Infrared Detecting Set (IRDS) with a new and improved multi-spectral Electro-Optical (EO) system. AIMS installation has been completed.

(7) Computer-Aided Pointing System. The Computer-Aided Pointing System (CAPS) is a modification to the AN/AVX-1. This change provides operator aids to enhance EO search, identification, and targeting capabilities. All P-3C Aircraft with the AN/AVX-1 have been retrofitted with the CAPS.

3. P-3C Block Modification Upgrade Program. The P-3C BMUP kit will replace the following Update II and II.5 systems:

NEW	**REPLACED**
AN/ASQ-227(V) Digital Computer Set CP-2451/ASQ-227(V)	AN/ASQ-212
Replacement Data Storage System (RDSS)	AN/ASH-33
AN/ARR-78(V)3 Advanced Sonobuoy Communications Link (ASCL)	AN/ARR-72
AN/USQ-78B Display and Control Unit CP-2435/USQ-78(V)	AN/AQA-7(V)
PCHRD Display	AN/ASA-66 Display
CHRD Displays	AN/ASA-70 Displays
Programmable Entry Panel (PEP)	Function Select Panels
SG-1156 ATSG	SG-1009 ASSG
AN/AQH-13 Acoustic Data Recorder (ADR)	AN/AQH-4(V)2
AN/ALR-66B(V)3 ESM	AN/ALQ-78A

4. P-3C Counter Drug Upgrade. The P-3C CDU kit replaces the following systems:

NEW	**REPLACED**
AN/APG-66 Air-to-Air Radar	AN/APS-115
AN/AVX-1 Electro-Optical System	None
Project Rigel	None

G. DESCRIPTION OF NEW DEVELOPMENT

1. Functional Description. P-3C sensor systems are designed to detect, localize, and track target objects below the sea surface, on the surface of the sea or land, and in the air. New OTH-T and surveillance capabilities and highly accurate navigation information combined with state-of-the-art data processing and display capabilities allow the crew to rapidly assess "the big picture." Advanced secure communications, which provide a real-time link between the onboard tactical data-processing system and remote command computer systems, make the P-3C an ideal choice for providing Task Force Commanders with C4ISR.

Sensor systems are divided into two main categories: acoustic and non-acoustic. Acoustic sensors employ passive and active sonobuoy search stores to locate submarine targets by processing sonic and sub-sonic frequencies unlinked by VHF transmitting deployed sonobuoys. Acoustic sensor station computers process data in real-time and provide the information to the aircraft general-purpose computer and displays.

Non-acoustic sensors focus on super-sonic frequency related target objects (encompassing a wide spectrum of the electromagnetic environment including radio, radar, infrared, and visible light frequency events) as well as monitoring geomagnetic field anomalies. The P-3C detects and tracks subsurface, surface (sea and land), and air targets using a combination of non-acoustic sensor equipment including Magnetic Anomaly Detection, radar, Identification Friend or Foe (IFF), visible and infrared (multispectral) optics, and electronic surveillance.

Weapons stores improve on the traditional P-3C anti-submarine/anti-surface capabilities by providing surgical strike capability while enhancing crew survivability.

a. P-3C Update III. The P-3C Update III Aircraft systems provide improved capability in the areas of sonobuoy communication and acoustic processing. The P-3C Update III Aircraft avionics improvements required additional cooling capacity and necessitated improvements to the aircraft's Environmental Control System (ECS). A Harpoon Missile capability was simultaneously developed. Briefly described, the P-3C Update III Aircraft equipment includes:

(1) Global Positioning System, AN/ARN-151(V)1. ECP-187 provided for the installation of the AN/ARN-151(V)1 GPS in all P-3Cs to provide highly accurate navigation information. The five-channel receiver-processor unit continuously tracks and monitors four satellites simultaneously, while the fifth channel tracks another satellite for changeover to maintain an acceptable geometry between satellites.

(2) Electronic Flight Display System. The EFDS is an updated version of the Flight Display System comprising the flight instruments, together with associated controls and aircraft interface. EFDS is designed to provide the Pilot, Copilot, and NAV-COMM Officer with a comprehensive, unambiguous presentation of navigation information adequate for both worldwide tactical and non-tactical navigation. The EFDS functionally replaces the electro-mechanical HSI and FDI indicators (ID-1540/A and ID-1556 respectively) and Navigation Availability Advisory Lights with a flat panel Active Matrix Liquid Crystal Display (AMLCD),

and integrates GPS navigation with the flight instruments. Additional information such as navigational aid waypoint locations, GPS annunciation, and EFDS status pages are also displayed.

(3) Replacement Inertial Navigation Unit. The RINU has become necessary due to the high operational expense of the LTN-72 Inertial Navigation Unit. The RINU will be installed, and training will be developed coincidental with the EFDS to include both systems. Computer-Based Training (CBT) for both systems is currently available at Patrol Squadron (VP)-30, Naval Aviation Training Unit (NAMTRAU), and all Wing Interactive Learning Centers (WILC).

(4) Digital Fuel Quantity System. The DFQS in the P-3C Update III is considerably more reliable than its predecessor. Additionally, it is easier for the Pilot and Flight Engineer (FE) to interpret rapidly.

(5) Communications Improvement Program, ECP Lockheed Martin Aeronautics Company (LMAC-1025). The Communications Improvement Program provides MIL-STD-188-181, MIL-STD-188-182, and MIL-STD-188-183 compliant secure voice SATCOM, which includes 5 kilohertz (kHz) and 25 kHz dedicated modes, and 5 kHz and 25 kHz Demand Assigned Multiple Access (DAMA) modes. This effort primarily uses Non-Developmental Items (NDI) with minimal use of Developmental Items to minimize cost and schedule impact. This program assumes prior or simultaneous incorporation of the following:

- ECP-988, AN/ARC-187(V) UHF Radio
- ECP-990, AN/ARC-182(V) VHF/UHF Radio
- ECP-1010, Secure Voice SATCOM
- AFC-522, Batwing SATCOM Antenna
- AFC-540, GPS

The C-10319A/ARC-182(V) Radio Set Control (RSC) is removed in its entirety. The C-11950/ARC-187(V) RSCs are removed from the Flight and NAV-COMM stations and are replaced by the C-12435/ARC-187(V) RSCs located in Rack F-1, along with the Crypto Variable Control Panel (C-12094/AR), which allows the Have Quick (HQ) word-of-the-day variable to be loaded into the AN/ARC-187(V). The MD-1324(C)/U Modem and RT-1571(A)/ARC-187 UHF Receiver-Transmitters are also located in Rack F-1.

The CIP adds another ANDVT in Rack B-3 next to the ANDVT installed for High Frequency operations. Additionally, the KY-58 is removed, the Z-AHQ adapter is discarded, and the KY-58 is re-installed on dzeus rails. The Operational Flight Program for the CDNU provides for control of the UHF-1, UHF-2, and the VHF-UHF Radios in all line-of-sight and SATCOM operations. The Universal Timing Signal from GPS is routed to the UHF radios to fully utilize the HQ features of UHF-1 and UHF-2. The CIP kit was installed in 21 P-3C Update III Aircraft (20 retrofit, one production) and two NAMTRAGRU Integrated Avionics Trainers (IAT).

(6) AN/ASQ-212 Digital Data Computer. The CP-2044/ASQ-212 Digital Data Computer embeds the functionality of the CP-901 and the logic units of Update II

and II.5 aircraft into a single subsystem. The computer is composed of two power modules and a single VME circuit board. External memory, input/output interface modules, and signal data conversion functions are performed by Modernized Logic Units.

(7) Weapons. In addition to carrying a variety of sonobuoys, flares, and other pyrotechnic devices, the P-3C Update III employs a wide array of missiles and mines including the Mark (MK) 60 mines, MK 50 torpedoes, On-Line Harpoon missile, and the recently-added SLAM and SLAM ER upgrade.

In the AIP aircraft, the AGM-84E SLAM missile is being replaced by the newer AGM-84H SLAM ER, with both types eventually being converted to the AGM-84K SLAM ER Automatic Target Acquisition (ATA). Details regarding these and other weapons can be found in the applicable NTSPs for each weapon.

In addition to loaded bombs, mines, and missiles, the P-3C can carry 84 sonobuoys (48 external and 36 internal) and various pyrotechnics and signals. Wing pylon and bomb bay loaded weapons can be configured as indicated in the table below. Torpedoes are not loaded on the wings, nor are Maverick missiles on inner or center section stations, or forward-firing weapons on the inner wing pylons. See the Naval Air Training and Operating Procedures Standardization (NATOPS) manual for current details.

LOCATION	**WEAPON**
Bomb Bay	8 MK 46 or 6 MK 50 Torpedoes 8 500-pound Mines/Depth Bombs 3 1,000-pound Mines/Depth Bombs 1 2000-pound Depth Bombs
Two Center-Section Pylons	2 AGM-84 Harpoon missiles 2 2,000-pound Mines
Two Inner Wing Pylons	2 2,000-pound Mines/Bombs 1 AN/AWW-13 Advanced Data Link Pod
Six Outer Wing Pylons	2 2,000-pound Mines 4 1,000-pound or 6 500-pound Mines/Bombs 4 2.75 inch/5 inch FFAR (rocket) launchers 4 AGM-65F Maverick missiles (some aircraft) 4 AGM-84D Harpoon missiles 4 Illumination Flare Dispensers
Per Wing/Inboard to Outboard	2 MK 46/50 Torpedoes or 1,000-pound Mines or Rockets 2 MK 46/50 Torpedoes or 500-pound Mines or Rockets

b. P-3C Aircraft Improvement Program. The P-3C AIP Aircraft provides improvements in C^4ISR, OTH-T capabilities, and survivability. In addition to the standard weapons payload, AIP added the Maverick Missile System as outlined in AFC-574. The P-3C AIP Aircraft equipment includes:

(1) AN/APS-137B(V)5 Radar. The AN/APS-137B(V)5 Radar is capable of multi-mode operation to provide periscope and small target detection, navigation, weather avoidance, long-range surface search, SAR, and ISAR imaging modes. SAR provides detection, identification, and classification capability of stationary targets. ISAR provides detection, classification, and tracking capability against surface and surfaced submarine targets. The AN/APS-137B(V)5 ISAR provides range, bearing, and positional data on all selected targets, and provides medium or high resolution images for display and recording.

(2) EP-2060 Pulse Analyzer. The EP-2060 is a firmware/hardware "upgrade" to the AN/ULQ-16 and works in conjunction with the AN/ALR-66C(V)3 to detect, direction-find, quantify, process, and display electromagnetic signals emitted by land, ship, and airborne radar systems. Hardware changes include a floppy diskette drive and four extra buttons that provide shortcuts into existing features on the EI-1400 Control/Display, which replaced the AN/ULQ-16 EI-1300 Control/Display. Firmware changes provide a new automatic scan measurement mode.

(3) Color High Resolution Display. Three CHRD units are installed for general purpose, dual channel, and closed circuit displays. They provide the operator with improved operator-machine interface and 1024 x 1280 pixel landscape orientation, improved response time to operator commands, and an increase of 300% in the video refresh rate to minimize display flicker. Five types of data may be displayed on the CHRD: cursors, cues, tableau, alerts, and raw video.

(4) Pilot Color High Resolution Display. The PCHRD provides the ability to display complex tactical and sensor information to the Pilot station.

(5) Hard Copy Recorder. The HCR is used to record data from the mission event from the CPC-2339 and imaging data. The HCR also records data that is displayed on the CHRDs or PCHRD.

(6) Over-the-Horizon Airborne Sensor Information System. OASIS III data is received and prepared for transmission via the OASIS III Tactical Data Processor (TDP). OASIS III processes and correlates all data provided via MATT and Mini-DAMA. The OASIS III TDP provides an Officer in Tactical Command Information Exchange System (OTCIXS) message link, coupled with GPS-aided targeting using the AN/APS-137B(V)5 Radar.

(7) Multi-Mission Advanced Tactical Terminal, OZ-72(V). The MATT system provides Tactical Receive Equipment capability to receive and decrypt three simultaneous channels of Tactical Data Information Exchange Subsystem-B (TADIXS-B), Tactical Related Approach (TRAP), and Tactical Information Broadcast Service information. The system routes the received broadcast data to the OASIS III for further processing.

(8) AN/USC-42(V)3 Miniaturized Demand Assigned Multiple Access. The Mini-DAMA provides for secure voice communications. The Mini-DAMA provides for the transmission, reception, and decryption of OTCIXS data and the subsequent routing of that data to the OASIS III TDP.

(9) AN/AAS-36A Infrared Detecting Set. The IRDS provides passive imaging of IR wavelength radiation to visible light emanating from the terrain along the aircraft flight path for standoff detection, tracking, and classification capability. The IRDS update primarily consists of an improved afocal optical lens for enhanced image acquisition.

(10) AN/AAR-47 Missile Warning System. The MWS is a passive EO system designed to detect surface-to-air and air-to-air missiles. Upon detection of an incoming missile, the MWS will report the impending threat to the Countermeasures Dispensing System (CMDS).

(11) AN/ALE-47 Countermeasures Dispensing System. The AN/ALE-47 CMDS is used for dispensing flares, chaff, non-programmable expendable jammers, and programmable jammers.

(12) AN/AIC-41 Intercommunications System. The AN/AIC-41 Digital Communications Management System provides improved internal communications within the aircraft and replaces the analog communications switching system for modal control of communications equipment.

(13) AN/AVX-1 Electro-Optical Sensor System. The AN/AVX-1 EOSS is an airborne stabilized EO system that provides video for surveillance and reconnaissance missions. The AN/AVX-1 EOSS has the capability to detect and monitor objects during the day from exceptionally clear to medium hazes, dawn and dusk, and during the night from a full moon to starlight illumination. For the majority of P-3C aircraft, including all AIP version Update III P-3Cs, the AN/AVX-1 has been replaced by the superior AN/ASX-4 AIMS.

(14) AGM-65F Infrared Maverick Missile System. The IR Maverick Missile is an IR-guided, rocket-propelled, air-to-ground missile for use against targets requiring considerable warhead penetration prior to detonation. The missile is capable of two pre-flight selectable modes of target tracking. The armor or land track mode is optimized for tracking land-based targets such as tanks or fortified emplacements. The ship track mode is optimized for tracking seaborne targets. The missile is capable of launch-and-leave operation. After launch, automatic missile guidance is provided by an imaging IR energy sensing and homing device.

(15) AN/ALR-66C(V)3 Electronic Support Measures Set. The AN/ALR-66C(V)3 ESM Set provides all the same features as an AN/ALR-66B(V)3 ESM Set. However, the AN/ALR-66C(V)3 incorporates the AS-105 Spinning DF Antenna, and the Operational Flight Program is modified to accommodate this configuration difference. The EP-2060 Pulse Analyzer, an upgrade to the AN/ULQ-16, is also included.

(16) Manual Entry Panels. Manual Entry Panels (MEPs) provide the operator with an interface to control system-operating modes.

(17) AN/USQ-78A(V) Display Control Unit. The modification to the CP-1808/USQ-78(V) DCU includes changes to the chassis, Input-Output (I-O) panel, Dual Display Channel sub-unit, Bulk Store Controller sub-unit, System Controller sub-unit, Data Formatter sub-unit, internal cabling, and power supply area. This was accomplished through a field retrofit to the aircraft. The DCU was re-identified as the CP-2331/USQ-78A(V). The modified system provides an improved operator-machine interface with the addition of CHRDs at SS-1 and SS-2. This provides a 1024 x 1280 pixel landscape orientation; improved response time to operator commands; a quadrupling of acoustic display history; 1, 2, or 4-bit gram display resolution; and a 300% increase in the video frame refresh rate.

(18) AN/ASQ-222 Digital Data Computer. The CP-2339/ASQ-222 Digital Data computer is an improvement on the CP-2044/ASQ-212 and incorporates the functionality of the MLUs.

(19) Tactical Mission Software. The Tactical Mission Software (TMS) for the P-3C AIP Weapon System incorporates functionality to support the systems unique to the P-3C AIP Aircraft. P^3I improvements consist of required revisions to the baseline program including systems integration, functionality enhancements, and support for new systems. The P-3C AIP TMS builds are as follows:

BUILD	DESCRIPTION
A4.7A	Baseline P-3C AIP TMS software
A4.7A1	Provides color capability on the CHRDs and PCHRDs and workload sharing enhancements at the NAV-COM station
A4.7A2	Supports RDSS, AN/USQ-78A, and AIMS
A4.7A3	Provides limited workload sharing capabilities between SS-1, SS-2, and SS-3. Provides Tactical Data Distribution at all stations. Supports all configurations of the P-3C AIP including the implementation of new CHRDs, PEPs, trackballs, keysets, and joysticks at SS-1 and SS-2. Also supports the installation of SEI and ESEI.

c. P-3C Block Modification Upgrade Program. The P-3C BMUP Aircraft systems will capture P-3C Update III functionality while addressing component obsolescence. Equipment upgrades will provide improved operator-weapon system interface, stable and higher resolution color displays that are common with P-3C AIP Aircraft, and reduced aircraft weight. The P-3C BMUP Aircraft will incorporate changes to the acoustic and non-acoustic subsystems. Additional capabilities will include the MK-50 Torpedo Control System and Harpoon Missile Simulator.

(1) Acoustic Subsystem. The BMUP Acoustic Subsystem will be a combination of existing and modified hardware consisting of the following components:

(a) AN/USQ-78B Display and Control System. The AN/USQ-78B embeds the functionality of the AN/UYS-1 Acoustic Processor (common to the P-3C Update III configuration) and the AN/USQ-78A Display and Control System found in the P-3C AIP configuration into a single subsystem, the CP-2435/USQ-78(V). The Analyzer Sub Unit incorporates seven Virtual Machine Environment (VME) circuit boards and is a combination of Commercial Off-The-Shelf (COTS), NDI, and modified NDI replacing the AN/UYS-1 Processor. The AN/USQ-78B will provide a 1024 x 1280 pixel landscape orientation, improved response time to operator commands, a quadrupling of acoustic display history, an increase in the video frame refresh rate, and concurrent Extended Echo Ranging (EER) acoustic signal processing. The BMUP Aircraft will utilize the displays and controls associated with the P-3C AIP configuration (alphanumeric keyboard, trackball, PEP, and color high-resolution flat panel displays) at SS-1 and SS-2.

(b) AN/ASQ-227(V) Digital Data Computer. The CP-2435/ASQ-227(V) Digital Data Computer embeds the functionality of the CP-901 and the logic units of Update II and II.5 aircraft into a single subsystem. The computer is composed of two power modules and a single VME circuit board.

(c) Replacement Data Storage System. The RDSS is a modern, high-speed, high capacity, data storage system utilizing magnetic optical media. The RDSS will replace the AN/ASH-33 DMTS. The RDSS will function as a program loading and digital data extraction device between the Central Computer and the SASP.

(d) AN/ARR-78(V)3 Advanced Sonobuoy Communications Link Plus. The ASCL+ is a single chassis, 40-channel, dual-receiver that is a form, fit, and function replacement for the AN/ARR-72. The dual-receiver module is capable of all receiver functions, including Analog, Frequency Shift Keying, Audio, RF-level monitor, and On-Top Position Indicator (OTPI).

1 Radio Receiver. The 40-channel receiver unit assembly provides 32 individual acoustic receiver modules that tune to any one of 99 RF channels. Additionally, each receiver unit has another eight auxiliary modules for monitoring sonobuoy audio, OTPI, and RF reference signals.

2 Receiver Control. The Receiver Control unit provides manual control of the OTPI receiver only, permitting the Pilot to select the OTPI receiver and tune it to any one of the 99 channels.

3 Control Indicator. The C-10126/ARR-78(V)1 Control Indicator is modified to provide status for up to 40 receiver channels.

4 Receiver Indicator. The ID-2086/ARR-78(V)1 Receiver Indicator is modified to simultaneously display the status of all 40 receiver modules on a continuous basis.

5 Radio Frequency Amplifier. The AM-6878/ ALQ-158(V) is a dual channel RF amplifier that boosts the signals from the antennas and sends the output to the receiver.

(e) SG-1156/A Acoustic Test Signal Generator. The ATSG generates calibrated signals simulating multiple type sonobuoy transmissions on any single RF selected by the operator for the purpose of end-to-end system tests. It is a Build-to-Print/NDI unit and is backward compatible with existing P-3C Update III Aircraft equipment.

(f) AN/AQH-13 Acoustic Data Recorder. The AN/AQH-13 ADR is a form, fit, and enhanced function replacement for the existing AN/AQH-4A(V)2 acoustic recorder. It is a single tape transport unit with a single remote control panel.

(2) Non-Acoustic Subsystem. The BMUP Non-Acoustic Subsystem is a combination of existing and modified hardware consisting of the following components:

(a) AN/ALR-66B(V)3 Electronic Support Measures Set. The ESM Set provides concurrent radar warning receiver data (threat data) along with ESM data (fine measurement of classical parametric data). The AN/ALR-66B(V)3 Set provides increased sensitivity and processing improvements over its predecessor. Further refinements to the operational flight program and the library will provide an operator modifiable library.

(b) Displays and Controls. The BMUP Aircraft will utilize improved versions of the displays and controls associated with the P-3C AIP configuration (alphanumeric keyboard, trackball, PEP, and color, high-resolution, rugged, flat panel displays) at TACCO, NAV-COMM, and SS-3. The Flight Station will utilize the PCHRD and Data Entry Panel (DEP).

(c) Hard Copy Recorder. The NAV-COMM Station will use the Hard Copy Recorder found in the P-3C AIP configuration. This system replaces the teleprinter in Update II and II.5 aircraft.

(d) Harpoon Missile Simulator. The BMUP Aircraft will be Harpoon capable and will include the Harpoon Missile Simulator.

(e) MK-50 Torpedo Control System. The BMUP Aircraft will be MK-50 capable.

(3) Electronic Flight Display System. The EFDS will be a requirement for BMUP Aircraft and will be installed under the P-3C retrofit program. EFDS is an updated version of the Flight Display System. It is defined as the flight instruments, associated controls, and interface to the aircraft, and is designed to provide the Pilot, Copilot, or NAV-COMM Officer with a comprehensive, unambiguous presentation of navigation information adequate for both worldwide tactical and non-tactical navigation. The display unit uses a flat panel domestic AMLCD. The EFDS functionally replaces the P-3 electro-mechanical Horizontal Situation Indicator (ID-1540/A), electro-mechanical FDI (ID-1556), selected functions of the Navigation Availability Advisory Lights, and integrates GPS navigation with the flight instruments.

Additional information such as navigational aid waypoint locations, GPS annunciation, and EFDS status pages are also displayed.

d. P-3C Counter Drug Upgrade. The P-3C CDU Aircraft systems capture P-3C Update III functionality while adding additional capability. Equipment upgrades will provide improved operator-weapon system surveillance capabilities. The P-3C CDU Aircraft will incorporate changes to the TACCO and non-acoustic systems. These systems are available for independent installation via Roll On-Roll Off (RORO) mission specific equipment in select Active Duty and Reserve P-3C Update III Aircraft, provided the aircraft has wiring modifications incorporated.

(1) AN/APG-66. The AN/APG-66 is installed to provide improved surveillance capabilities for the P-3C Aircraft when involved in the Counter Drug mission. The AN/APS-115 Antenna is removed and replaced with the AN/APG-66 Antenna.

(2) AN/AVX-1. Refer to paragraph G.1.b.(13) above for the description of this system.

(3) Project Rigel. Project Rigel is classified. For information on Project Rigel, contact PMA290.

2. Physical Description

a. P-3C Update III. The following are the P-3C Update III Aircraft dimensions:

Wing Span..... 99 feet, 8 inches
Length ..... 116 feet, 10 inches
Height..... 33 feet, 8½ inches
Maximum Gross Weight..... 142,000 pounds

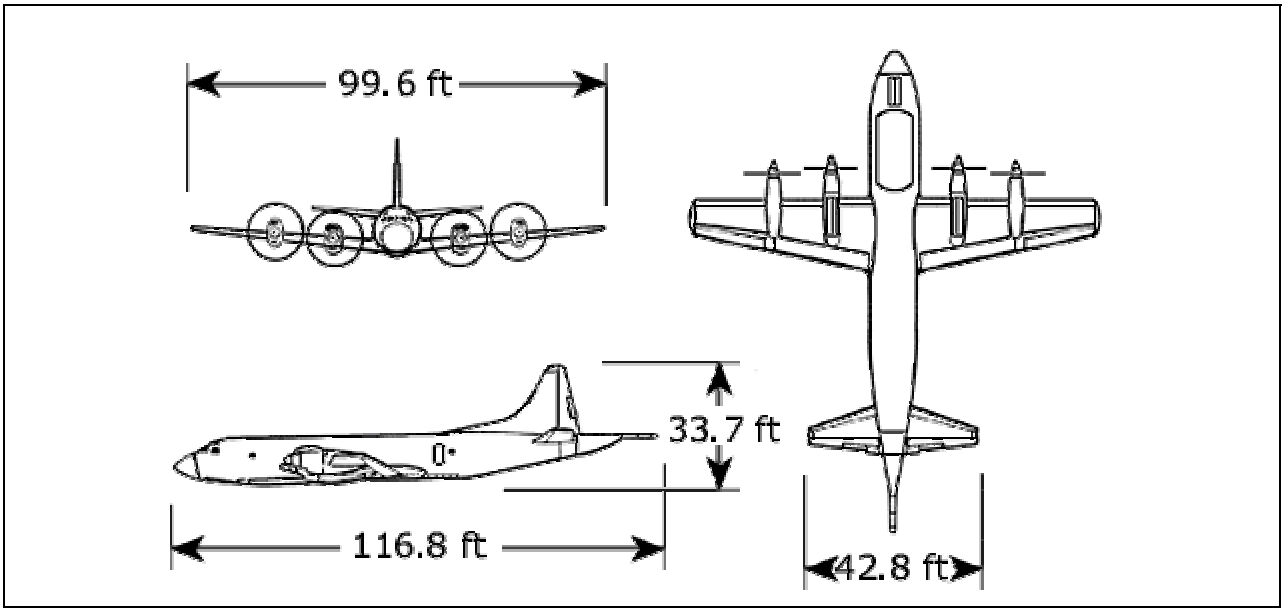

b. P-3C Aircraft Improvement Program. The general cabin arrangement of P-3C AIP Aircraft closely resembles that of its predecessors in that operator station locations are unchanged, except for the addition of the AN/ASX-4 Operator Station located at the starboard aft observer position. The TACCO, NAV-COMM, and SS-3 positions have undergone extensive change including new displays, joysticks, trackballs, and PEP. The appearance of SS-1 and SS-2 remains unchanged in the non-AN/USQ-78A(V) configuration. With the addition of the AN/USQ-78A(V), SS-1 and SS-2 will get new the CHRD, joysticks, trackballs, and PEP.

(1) Equipment Location. The physical location of the P-3C AIP Aircraft equipment can be found in the P-3C AIP Aircraft Integrated Logistics Support Plan (ILSP), AV-ILSP-30A-270.

(2) Equipment Dimensions. The physical dimensions of P-3C AIP Aircraft equipment can be found in the P-3C AIP Aircraft ILSP, AV-ILSP-30A-270.

c. P-3C Block Modification Upgrade Program. The general cabin arrangement of P-3C BMUP Aircraft closely resembles that of its predecessors in that operator station locations are unchanged. All of the operator stations have the appearance of the P-3C AIP configuration.

(1) Equipment Location. The physical location of the P-3C BMUP Aircraft equipment can be found in the P-3C AIP Aircraft ILSP, AV-ILSP-30A-270.

(2) Equipment Dimensions. The physical dimensions of P-3C BMUP Aircraft equipment can be found in the P-3C AIP Aircraft ILSP.

d. P-3C Counter Drug Upgrade. The general cabin arrangement of P-3C CDU Aircraft closely resembles that of its predecessors in that operator station locations are unchanged. All of the operator stations have the appearance of the Update III or Update II.5 configuration.

(1) Equipment Location. The physical location of the P-3C CDU Aircraft equipment can be found in the P-3C AIP ILSP.

(2) Equipment Dimensions. The physical dimensions of P-3C CDU Aircraft equipment can be found in the P-3C AIP ILSP.

3. New Development Introduction

a. Background. Though the airframe has changed little in nearly forty years of Navy service, mission requirements have demanded that the sensor systems, data processing and display package, communications, and weapon systems continually improve in capability. The avionics and weapons system upgrades to the P-3C have historically been installed in blocks called "Updates." Each update is typically achieved by accomplishing several AFC and/or Avionics Change (AVC) modifications to the airframe or installed equipment.

(1) Introduction. In February 1959, the Navy awarded Lockheed a contract to develop a replacement for the aging P-2 Neptune. The P-3V Orion entered the inventory in July 1962 and almost 40 years later it remains the Navy's sole land-based ASW aircraft. It has gone through one designation change (P-3V to P-3) and three major models: P-3A, P-3B, and P-3C, the last mentioned being the only MPA in active service. The last Navy P-3C came off the production line at the Lockheed plant in April 1990.

(2) Earlier Updates. The P-3C Update I was introduced in 1975 and incorporated new data processing avionics and software. Two years later, Update II provided an infrared detection system, a sonobuoy reference system, the Harpoon anti-ship missile, and a 28-channel magnetic tape recorder. Update III incorporated numerous improvements to acoustic and non-acoustic sensors, the digital data computer and data processing systems, communications, electronic countermeasures, and other systems.

(3) Initial Replacement Plans. Not until 1986 was Update III approved for full production. By this time, the search had begun for a replacement platform for the large number of P-3 Aircraft that would approach the end of their useful service lives beginning during the 1990s and that would house the next generation avionics package (Update IV). The Navy selected Lockheed in October 1988 to develop the successor maritime patrol aircraft, a virtually new design derived from the P-3C called the P-7 or Long Range Air ASW-Capable Aircraft (LRAACA).

Over the years, the P-3C had lost some of its range and time-on-station capability due to increased payloads. A replacement plane with increased payload and at least the original P-3C range was desired in an aircraft with newer technology that could reduce support costs and provide enhanced antisubmarine warfare capabilities. It was to include improved engines, reliability, maintainability, and survivability enhancements, vulnerability reductions, and advanced mission avionics.

The Navy planned to acquire 125 aircraft over a 5-year period. In May 1987, Office of the Secretary of Defense (OSD) directed the Navy to conduct a patrol aircraft mission requirements determination study (payload, range, speed, survivability, etc.) Three proposals were received and evaluation began in February 1988. In October 1988, the Navy selected Lockheed's proposal as being both lower in cost and technically superior to proposals submitted by Boeing and McDonnell Douglas.

In January 1989, the Defense Acquisition Board (DAB) recommended full-scale development of the program. The Navy awarded a fixed-price incentive contract to Lockheed to design, develop, fabricate, assemble, and test two prototype aircraft, designated the P-7A. In November 1989, Lockheed announced a large cost overrun in its development contract due primarily to schedule and design problems.

The LRAACA program was finally cancelled by the DAB at the end of 1990, on the grounds that it had fallen behind schedule. This decision left the Navy without a program to replace its aging P-3 Aircraft. In 1992, the Boeing Update IV avionics upgrade, an important element of the P-7A (initially to have been applied to 109 earlier P-3Cs), was also cancelled.

b. Current Sustainment. There are more than 200 P-3C Aircraft in the Navy inventory with the average age of over twenty years and a service life rated at 29.5 years. These P-3Cs exist in a wide variety of configurations: Update II, Update II.5, Update III, AIP, BMUP, CDU, and variations thereof. The Navy's P-3C modernization plan is to provide a more tailored force optimized for regional and littoral conflict focusing on mission system upgrades, sustaining inventory, and reducing multiple configurations. Balancing fiscal constraints with operational requirements, the Navy has initiated several programs to sustain and modernize its aging fleet of P-3C (and EP-3E) aircraft. A brief description of some of these efforts follows:

(1) Aircraft Improvement Program. Lockheed Martin Tactical Defense Systems (LMTDS) AIP retrofits existing P-3C Update III Aircraft that are already equipped with the CP-2044 Digital Data Computer and the AN/ALR-66B(V)3 Electronic Support Measures Set. Delivery of the P-3C AIP Aircraft to the fleet began in April 1998 and is scheduled to be completed at the close of FY03.

(2) Sustained Readiness Program. Raytheon Systems Company was contracted to extend the service life of the P-3C (from the previous 29.5 years to 38 years) through the Sustained Readiness Program (SRP). P-3C Aircraft inducted at the Raytheon Aircraft Integration Systems (AIS) installation at Greeneville, Texas, were inspected, refurbished, and then reassembled. Some major structural components were replaced on all aircraft; others on a case-by-case basis. Due to excessive schedule slippage and cost overruns,

SRP was curtailed in January, 2000. SRP was completed on the thirteen P-3Cs that were in process. The remaining 19 aircraft that had been inducted but not yet in work were flown away to the Lockheed Martin facility at Greenville, South Carolina, for completion of the SRP Aircraft Recovery Program (SARP).

SRP and a follow-on Service-Life Extension Program (SLEP) were planned for 221 P-3C Orions by 2010. Both programs have been cancelled or discontinued.

(3) Service-Life Assessment Program. Lockheed Martin Aeronautical was selected by the Navy to conduct Phases II and III of the P-3C Service-Life Assessment Program (SLAP). The company will conduct full-scale fatigue testing of a P-3C, followed by a teardown and analysis of the airframe. The Phase II/III contract is a continuation of Phase I, the results of which will be used to establish benchmarks for the next phases. The SLAP, originally planned to be completed by March 2002, will be used to determine the requirements for a SLEP to extend the life of the P-3C fleet out to 2015.

(4) Block Modification Update Program. The BMUP will modify 25 P-3C Update II.5 Aircraft with delivery beginning in March 2002. Eight BMUP aircraft will be delivered to the Reserve force while the remaining seventeen will be dispersed throughout the active fleet. A total of eight BMUP kits have been authorized and funded by Congress to date. Funding for additional kits will be needed over the next several years. LMTDS is under contract to engineer the BMUP integration and produce three kits, two of which will be installed in P-3C Aircraft at the company's facility in Greenville. The company plans to produce the remaining 22 kits authorized under a separate contract. Raytheon Systems Company (under Modification/ Installation Program (MIP), discussed above) and Boeing have been selected to install a combined total of 23 kits.

(5) Modification/Installation Program. Raytheon was contracted by the Navy to carry out an extensive MIP to upgrade a wide variety of current equipment and/or install new systems and equipment in all type/model/series P-3 Orion. The program funds, among other things:

- installation of avionics, mission systems, and components (including upgrade kits and government-furnished equipment)
- structural rework (including airframe changes) and repair
- corrosion-control work
- production of operator and maintenance trainer devices and long-term logistics services

Selected SRP and BMUP kit installations are being performed by Raytheon AIS at facilities in Texas as well as using field teams to support Navy requirements worldwide. The MIP program is also structured to accommodate FMS requirements.

(6) Counter-Drug Update. Delivery of the P-3C CDU Aircraft began in 1998; eighteen aircraft were modified.

c. New Replacement Initiatives. For the eventual future replacement of the P-3C (and also the EP-3E airframes), the Navy has initiated the Multi-mission Maritime Aircraft (MMA) program.

d. Operational Aircraft Configurations. One undesired yet unavoidable result of this complex sustainment and modernization effort has been the evolution of multiple P-3C MPA configurations (with minor variations within each type dependent upon aircraft wiring differences, etc.), which further complicate training requirements. The following four configurations are the focus of this NTSP:

(1) P-3C Update III. P-3C Update III Aircraft system introduction was accomplished through a combination of new production aircraft and the retrofit of P-3C Non-Update (NUD) and P-3C Update I Aircraft.

(2) P-3C Aircraft Improvement Program. System introduction of the P-3C AIP Aircraft is being accomplished through retrofit of the P-3C Update III Aircraft that have the AN/ALR-66B(V)3 and AN/ASQ-212 installed under previous ECPs.

(3) P-3C Block Modification Upgrade Program. P-3C BMUP Aircraft system introduction will be accomplished through a modernization program by retrofit P-3C Update II and II.5 Aircraft.

(4) P-3C Counter Drug Upgrade. P-3C CDU Aircraft system introduction was accomplished through ECP-315, which addressed the design, manufacture, and installation of aircraft wiring provisions for AFC-563 kits in 32 aircraft (18 Active Duty and 14 Reserve). Ten Active Duty and five Reserve RORO kits are provided for AN/AVX-1 and 10 RORO kits for AN/APG-66 (Active Duty aircraft only). ECP-391, Project Rigel, addressed the design, manufacture, and installation of aircraft wiring provision kits in 18 Active Duty aircraft and eight RORO kits.

4. Significant Interfaces. There are no additional interfaces for the P-3C Series Aircraft other than those identified in the functional description.

5. New Features, Configurations, or Material. Not Applicable (NA)

H. CONCEPTS

1. Operational Concept

a. P-3C Update III. The P-3C Update III Aircraft is operated by an 11 member aircrew comprised of five officers and six enlisted personnel. Officers include a Pilot, Copilot, Third Pilot, Navigation Communications Officer, and a Tactical Coordinator. Enlisted crewmembers include two Flight Engineers, one Non-Acoustic and two Acoustic SS Operators, and an In-Flight Technician, selected from the following ratings:

- Aviation Electrician's Mate (AE)
- Aviation Electronics Technician (AT)
- Aviation Machinist's Mate (AD)
- Aviation Ordnanceman (AO)
- Aviation Structural Mechanic (AM)
- Aviation Structural Mechanic (Safety Equipment) (AME)
- Aviation Warfare Systems Operator (AW)
- Aviation Master Chief Aircraft Maintenanceman (AFCM)
- Aviation Master Chief Avionics Technician (AVCM)

Patrol squadrons operate either with nine aircraft from established Naval Air Stations (NAS) worldwide or with ten aircraft at MCB Kaneohe Bay, Hawaii. The P-3C Update III Aircraft continues the P-3C capability of operating one or more aircraft from remote airfields with no organizational or intermediate level support for short periods of time.

b. P-3C Aircraft Improvement Program. The P-3C AIP Aircraft is also operated by a crew composed of five officers and six enlisted personnel. The operational concept for the P-3C AIP Aircraft remains the same as previous updates to the P-3C Aircraft.

Aircraft with the AIMS system installed at the starboard Aft Observer station, but without workload sharing functionality at Sensor Stations One and Two, have another (non-acoustic) sensor station that can be manned by qualified cross-trained aircrew members, when required, to reduce SS-3 Operator workload. On AIP aircraft whose equipment and wiring allow for workload sharing, SS-1 and SS-2 Operators can assist by operating AIMS directly from their workstations.

c. P-3C Block Modification Upgrade Program. The operational concept for the P-3C BMUP Aircraft will remain the same as previous updates to the P-3C Aircraft.

d. P-3C Counter Drug Upgrade. The operational concept for the P-3C CDU Aircraft remains the same as previous updates to the P-3C Aircraft with the exception that personnel in the Cryptologic Technician rating will operate the Project Rigel equipment.

2. Maintenance Concept

a. P-3C Update III. Plans for three level maintenance support of the P-3C Update III Aircraft equipment have been developed under existing equipment maintenance plans and P-3C maintenance programs. Transition to Navy support was phased-in, based on the schedules delineated in the individual system or equipment ILSP. Material support was in place for the basic P-3C Update III Aircraft in 1986.

(1) Organizational. Organizational level maintenance in support of the P-3C Update III Aircraft consists of fault isolation using various computer diagnostic programs and onboard test equipment, removal and replacement of defective Weapon Replaceable Assemblies (WRA) and Shop Replaceable Assemblies (SRA), and repair verification testing. Organizational level maintenance is performed by aviation maintenance personnel with NEC codes 8819 and 8319.

(a) Preventive Maintenance. Preventive maintenance includes scheduled, special, and phase inspections, including corrosion inspections and preservation of all equipment. All P-3C's undergo a modified phase inspection called the "Isochronal Scheduled Inspection System" (ISIS) in accordance with procedures outlined in the NAVAIR 01-75PAA-6(I) [December 2000] Periodic Maintenance Information Cards.

(b) Corrective Maintenance. Corrective maintenance consists of repairs to power plants, airframes, aircraft wiring and connectors; system fault isolation to a defective WRA or SRA; replacement of the WRA or SRA; and repair verification using Built-In Test (BIT), in-flight performance monitoring, or appropriate test sets and common support equipment. Defective WRAs and SRAs are forwarded to the Intermediate Maintenance Activity (IMA) for repair.

(2) Intermediate. The intermediate level maintenance concept is to repair those WRAs and SRAs specifically identified in the individual system's Maintenance Plan. Intermediate level maintenance is performed on engines, airframe components, WRAs, SRAs, chassis-mounted components, and wiring harnesses that are beyond the organizational level capability to repair. The following illustrates the intermediate level repair requirements by system:

SYSTEM	INTERMEDIATE MAINTENANCE REQUIREMENTS
T56 Engine	First-degree intermediate level repair, with test cell facility
54H60-77 Propeller	Repair to the SRA component level using Valve Housing NA 03-20CBBK-1 test system, P/N 9770-0553
GTCP95-2/-3/-10 Auxiliary Power Unit (APU)	Limited degree intermediate level repair, with test cell facility
Engine Driven Compressor (EDC)	First-degree repair, with test cell facility using NA 03-30AK-105 test system, P/N 740700

SYSTEM	INTERMEDIATE MAINTENANCE REQUIREMENTS
AN/ARR-78(V)1 Sonobuoy Receiver	No intermediate level repair, sent to the depot level
AN/ASA-65(V)5 Magnetic Compensator	Repair to the SRA component level using the AN/ASM-3 Test Set
AN/ASQ-81(V)1 Magnetic Detecting Set	Repair to the SRA component level using the AN/ASM-454 Test Set
AN/USQ-78(V)3 Display Control Set	No intermediate level repair, sent to the depot level
AN/UYS-1(V)8 Signal Processor Set	No intermediate level repair, sent to the depot level
AN/AIC-22A(V) Intercom Set	Repair to the component level using the 2046/AIC-22 Test Set
AN/ARC-101 VHF Radio	Repair to the component level using the 56120-1/ARC Test Set
AN/ARC-161 High Frequency (HF) Radio	Repair to the component level using the AN/ARC-142/161 Test Set
KY-58/TSEC Secure Voice UHF	Repair to the SRA level at AIMDs having a cryptographic repair vault
A/A24G-9 True Airspeed Indicator	Test and check capability using the TTU-205 Test Set
AAU-28/A Altimeter	Test and check capability using the TTU-205 and TT-29A/E Test Set
AN/AJN-15 Flight Director System	No intermediate level repair, sent to the depot level
AN/ASA-66A Tactical Data Display	Repair to the component level using the AN/ASM-420 Test Bench
AN/ASA-69 Radar Scan Converter Group	No intermediate level repair, sent to the depot level
AN/ASA-70 Tactical Data Display Group	No intermediate level repair, sent to the depot level
ID-1481A/A Attitude Indicator	Repair to the SRA component level using the TS-2471/ASM-258 Test Set
MB-1 Standby Magnetic Compass	Repair to the SRA component level using the TTU-205 Test Set
MM-4 Vertical Gyro Indicator	Test and check capability using the JT-27A Test Set

SYSTEM	INTERMEDIATE MAINTENANCE REQUIREMENTS
AN/ASQ-212 Computer	No intermediate level repair, sent to the depot level
AN/ARN-87 VHF Omni-directional Radio	Repair to the SRA component level using the NAV-750B AN/ASM-64 Test Set
AN/APS-115 Radar Set	Repair to the SRA component level using the AN/UPM-145 and AN/APM-317 Test Sets
AN/ARN-84 Navigation Receiver	Repair to the SRA level using the AN/ARM-155 Test Set
SG-1156/A Acoustic Data Recorder	No intermediate level repair, sent to the depot level
AN/ALR-66B(V)3 Electronic Support Measures Set	No intermediate level repair, sent to the depot level
AN/APX-72 IFF Transponder Set	Repair to the SRA component level
AN/APX-76B IFF Interrogator Set	Repair to the SRA component level using the TTU-205 Test Set
KIR-1A/TSEC Interrogator	Repair to the SRA level at AIMDs having a cryptographic repair vault
KIT-1A/TSEC Transponder	Repair to the SRA level at AIMDs having a cryptographic repair vault
AN/AQH-4A(V)2 Sound Recorder	Repair to the SRA component level using the AN/USM-449 Test Bench
AN/APN-194(V) Radar Altimeter	Repair to the SRA component level using the AN/APM-403 Test Set
AN/APN-227 Doppler Radar Navigation Set	No intermediate level repair, sent to the depot level
AN/APX-234 Weather Radar	No intermediate level repair, sent to the depot level
AN/APQ-107 Radar Altimeter	Repair to the SRA component level using the TS-2508/APM-254 Test Set
AN/ARN-118(V) TACAN Receiver	Repair to the SRA level using the TS-972V/ARN Test Set
AN/ARN-151(V) Global Positioning System	No intermediate level repair, sent to the depot level

SYSTEM	INTERMEDIATE MAINTENANCE REQUIREMENTS
AN/ARN-32 Navigation Receiver	Repair to the SRA component level using the AN/ARM-32 Test Set
AN/ARN-52(V) Navigation Receiver	Repair to the SRA component level using the AN/ARM-115 Test Set
AN/ARN-83 Direction Finder	Repair to the SRA component level using the AN/ARM-93 Test Set

(3) Depot. Depot level maintenance considerations for individual repairables are being implemented in accordance with new-start procedures. Depot level maintenance consists of repair, rework, or refurbishing of the aircraft or its systems, WRAs, and SRAs beyond the repair capability of the IMA. A Planned Maintenance System is specified in the individual P-3C Update III Aircraft system's Maintenance Plan. The P-3C Update III Aircraft Navy Support Date (NSD) occurred in third quarter FY90.

(4) Interim Maintenance. The P-3C Update III Aircraft Material Support Date (MSD) has been met. No interim maintenance is required.

(5) Life Cycle Maintenance Plan. The P-3C Update III Aircraft is on a five-year Scheduled Depot Level Maintenance cycle. In the future, P-3C Aircraft maintenance procedures will be performed using the Integrated Maintenance concept (IMC). The IMC is achieved through the application of Reliability Centered Maintenance principles that change the focus from a restoration maintenance program to a prevention maintenance program. No target implementation date has been established for the P-3C Aircraft to begin the IMC.

b. P-3C Aircraft Improvement Program. Plans for three level maintenance support of the P-3C AIP Aircraft equipment have been developed under existing equipment maintenance plans and P-3C maintenance programs. Organizational level maintenance in support of the P-3C AIP Aircraft consists of fault isolation using various computer diagnostic programs and onboard test equipment and removal and replacement of defective WRAs or SRAs. The maintenance concept for AIP unique systems will be organizational to depot.

(1) Organizational. Organizational level maintenance is generally limited to removal and replacement of installed WRAs or SRAs using various computer diagnostic programs, Maintenance Assist Modules, and onboard test equipment for fault isolation. Organizational level maintenance on P-3C AIP-peculiar avionics equipment is performed by aviation maintenance personnel with NEC 6719.

(a) Preventive Maintenance. Preventive maintenance includes scheduled, special, and phase (ISIS) inspections, including corrosion inspections and preservation of all equipment per NAVAIR technical manuals.

(b) Corrective Maintenance. Corrective maintenance consists of repairs to power plants, airframes, aircraft wiring and connectors, system fault isolation to a

defective WRA or SRA, replacement of the WRA or SRA, and verification of the repair using BIT, in-flight performance monitoring, or the appropriate test sets and common support equipment. Defective WRAs and SRAs are forwarded to the appropriate depot activity for repair.

(2) Intermediate. The maintenance philosophy for the basic P-3C AIP Aircraft is the same as the P-3C Update III Aircraft, however, the maintenance philosophy for P-3C AIP unique equipment is currently organizational to depot. Efforts are being made to identify and establish an intermediate level maintenance capability for repair of high failure rate items. Due to the majority of P-3C AIP systems being COTS/NDI components, the volume of modules to be repaired at the intermediate level is expected to be low. Final intermediate level requirements for the P-3C AIP Aircraft are under review at this time. Any changes to the P-3C AIP or P^3I maintenance philosophy will be incorporated into future revisions to this NTSP.

(3) Depot. Depot level maintenance considerations for individual repairables are being implemented in accordance with new-start procedures. Depot level maintenance consists of repair, rework, or refurbishing of the aircraft or its systems, WRAs, and SRAs beyond the repair capability of the IMA. A Planned Maintenance System is specified in the individual P-3C Update III Aircraft system's Maintenance Plan. The following illustrates depot level repair requirements by system:

SYSTEM	**DEPOT LEVEL REPAIR**
AN/AAR-47	All repairs are performed at the depot level.
AN/AGM-65F	All repairs are performed at the depot level.
AN/AIC-41	All repairs are performed at the depot level.
AN/ALE-47	All repairs are performed at the depot level.
AN/ALR-66C(V)3	All repairs are performed at the depot level.
AN/APS-137B(V)5	All modules are depot level repair only.
AN/ASQ-222	All repairs are performed at the depot level.
AN/ASX-4	All repairs are performed at the depot level.
AN/AVX-1	All repairs are performed at the depot level.
AN/USC-42(V)3	All internal maintenance actions are performed at the depot level.
AN/USC-43(V)3	All repairs are performed at the depot level.
Antenna-Combiner	All repairs are performed at the depot level.

SYSTEM	DEPOT LEVEL REPAIR
AS-105	All repairs are performed at the depot level.
CHRD	All repairs are performed at the depot level.
EP-2060	All repairs are performed at the depot level.
HCR	All internal maintenance actions are performed at the depot level.
OASIS III	All repairs are performed at the depot level.
OZ-72(V)	All repairs are performed at the depot level.
PCHRD	All internal maintenance actions are performed at the depot level.
SATCOM Antenna	All repairs are performed at the depot level.

(4) Interim Maintenance. Contractor Engineering and Technical Services (CETS) are required for the P-3C AIP Aircraft. Personnel from the Naval Air Technical Data and Engineering Service Command (NATEC) at NAS Jacksonville provide, on an as-required basis, advisory and training services for the P-3C AIP (with assistance from numbered Wings) to individual squadrons as they receive P-3C AIP Aircraft.

(5) Life Cycle Maintenance Plan. The P-3C AIP Aircraft is on a five-year Scheduled Depot Level Maintenance (SDLM) cycle.

c. P-3C Block Modification Upgrade Program. The aircraft equipment peculiar to BMUP is planned to be organizational to depot maintenance. Other aircraft equipment will retain the maintenance concept associated with their respective configurations. Organizational level maintenance in support of P-3C BMUP Aircraft is expected to consist of fault isolation using various computer diagnostic programs and onboard test equipment, and removal and replacement of defective WRAs and SRAs.

(1) Organizational. Organizational level maintenance is generally limited to removal and replacement of installed WRAs and SRAs using onboard test equipment and various computer diagnostic programs for fault isolation. Organizational level maintenance is performed by aviation maintenance personnel with NEC codes 8819 and 8319.

(a) Preventive Maintenance. Preventive maintenance includes scheduled, special, and phase (ISIS) inspections including corrosion inspections and preservation of all equipment.

(b) Corrective Maintenance. Corrective maintenance consists of repairs to power plants, airframes, aircraft wiring and connectors, system fault isolation to a

defective WRA or SRA, replacement of the WRA or SRA, and verification of the repair using BIT, in-flight performance monitoring, or the appropriate test sets and common support equipment. Defective WRAs and SRAs are forwarded to the appropriate intermediate or depot maintenance activity for repair.

(2) Intermediate. The aircraft equipment peculiar to BMUP will not be repaired at the intermediate level. WRAs and SRAs common to other configurations of P-3C Aircraft are repaired as specifically identified in the individual system's maintenance plan.

(3) Depot. Depot level maintenance considerations for individual repairables are being implemented in accordance with new-start procedures. Depot level maintenance consists of repair, rework, or refurbishing of the aircraft or its systems, WRAs, and SRAs beyond the repair capability of the IMA. A Planned Maintenance System is specified in the individual P-3C Update III Aircraft system maintenance plans. The following illustrates depot level repair requirements by system:

SYSTEM	DEPOT LEVEL REPAIR
AN/ALQ-158	All installed equipment (amplifier and antenna array) is repaired at the depot level.
AN/AQH-13 ADR	All repairs are performed at the depot level.
AN/ARR-78(V)3	All internal maintenance actions are performed at the depot level.
RDSS	All internal maintenance actions are performed at the depot level.
SG-1156/A	All modules are depot level repair only.

(4) Interim Maintenance. Interim maintenance, if required, will be addressed in future revisions to this NTSP.

(5) Life Cycle Maintenance Plan. The P-3C BMUP Aircraft is on a five-year Scheduled Depot Level Maintenance cycle.

d. P-3C Counter Drug Upgrade. The CDU maintenance philosophy is organizational to depot maintenance.

(1) Organizational. Organizational level maintenance is generally limited to removal and replacement of installed WRAs using various computer diagnostic programs for fault isolation and onboard test equipment. Organizational level maintenance is performed by personnel from aviation maintenance ratings with NECs 8819, 8319, and 6719.

(a) Preventive Maintenance. Preventive maintenance includes scheduled, special, and phase (ISIS) inspections including corrosion inspections and preservation of all equipment per NAVAIR technical manuals.

(b) Corrective Maintenance. Corrective maintenance consists of repairs to power plants, airframes, aircraft wiring and connectors, system fault isolation to a defective WRA, replacement of the WRA, and verification of the repair using BIT, in-flight performance monitoring, or the appropriate test sets and common support equipment. Defective WRAs are forwarded to the depot maintenance activity for repair.

(2) Intermediate. Refer to paragraph H.2.a.(2) for intermediate level maintenance capabilities of CDU systems common to the P-3C Update III Aircraft.

(3) Depot. Depot level maintenance consists of repair, rework, or refurbishing of the aircraft or its systems, WRAs, and SRAs beyond the repair capability of the organizational maintenance activity. A Planned Maintenance System is specified in the individual P-3C Update III Aircraft system maintenance plans.

(4) Interim Maintenance. NATEC will provide technical training and assistance for AN/APG-66, AN/AVX-1(V)1, and Project Rigel organizational level maintenance and RORO procedures.

(5) Life Cycle Maintenance Plan. The P-3C Update III Aircraft is on a five-year Scheduled Depot Level Maintenance cycle.

3. Manning Concept

a. P-3C Update III. P-3C Update III manpower requirements are based on the number of aircraft per squadron, operating hours per month, maintenance man-hours per month per aircraft, number of maintenance shifts, and the Maintenance Man-Hours per Flight Hour (MMH/FH).

The P-3C Update III Aircraft has the same operator requirements as previous updates to the P-3C Aircraft. Active duty aircrews consist of five officers and six enlisted operators. Reserve squadron aircrews consist of five officers and seven enlisted operators. Aircrew are listed in the table below.

POSITION	DESIGNATOR/ RATING	NEC	CREW RATIO	SEAT FACTOR
Pilot	1311	NA	See Note 1	1
Copilot	1311	NA	See Note 1	1
Third Pilot	1311	NA	See Note 1	1
TACCO	1321	NA	See Note 1	1
NAV/COMM	1321	NA	See Note 1	1
FE	AD, AE, AF, AM, AME, AO, AT, AV See Note 2	8251	See Note 1	2
In-Flight Technician (IFT)	AT	8262	See Note 1	1
SS-1 and SS-2	AW	7841	See Note 1	2
SS-3	AW	7861	See Note 1	1
In-Flight Ordnanceman	AO	8271	See Notes 1 and 3	1

Note 1: Crew ratio numbers are as listed in the ROC/POE.

Note 2: In accordance with CNO Message 211908Z JUN 00, the Aviation Structural Mechanic, Structures (AMS) and Aviation Structural Mechanic, Hydraulics (AMH) ratings merged to form the Aviation Structural Mechanic (AM) rating effective 1 March 2001.

Note 3: Reservists with NEC AO-8271 will continue to perform as In-Flight Ordnanceman.

b. P-3C Aircraft Improvement Program. The manning concept for the P-3C AIP Aircraft is the same as the P-3C Update III Aircraft with the following exceptions:

(1) Aircrew Manpower. The following P-3C AIP Aircraft Aircrew NECs were approved to reflect the peculiar skills needed to support the P-3C AIP Aircraft:

RATING	NEC	DESCRIPTION
AT	9402	*P-3C Update III ASUW Improvement Program (AIP) In-Flight Technician.* Performs in-flight duties of fault isolation and component repair of the P-3C AIP avionics equipment at the organizational level
AW	7877	*P-3C AIP Non-Acoustic Operator.* NEC awarded via cadre training pending implementation of formal training course. This NEC is being deleted and the billets and personnel will be recoded to 7861.

(2) Organizational Maintenance Manpower. The following NEC was approved to reflect the peculiar skills needed to support the P-3C AIP Aircraft at the organizational level:

RATING	NEC	DESCRIPTION
AT	6719	*Update III ASUW Improvement Program (AIP) OMA Weapons Systems Technician.* Performs organizational level maintenance on the avionics systems of the P-3C AIP Aircraft.

c. P-3C Block Modification Upgrade Program. The manning concept for the P-3C BMUP Aircraft remains the same as the P-3C Update III Aircraft. Introduction of the P-3C BMUP Aircraft will not cause any quantitative changes in manpower requirements at the squadron level, but may drive an increase in instructor personnel due to the introduction of additional courses. This information will be included in future updates to this NTSP.

d. P-3C Counter Drug Upgrade. The manning concept for the P-3C CDU Aircraft remains the same as the P-3C Update III Aircraft. Introduction of the P-3C CDU Aircraft is not expected to cause any quantitative changes in manpower requirements at the squadron level, but may drive an increase in instructor personnel due to the introduction of additional courses. New information will be included in future updates to this NTSP.

4. Training Concept

a. Training Concept Overview

(1) P-3C Update III. All initial training required for the P-3C Update III has been completed. All follow-on aircrew training is provided by the Fleet Readiness Squadron (FRS), VP-30, at NAS Jacksonville, Florida. Follow-on training for organizational and intermediate level maintenance is available at Maintenance Training Unit (MTU) 1011 NAMTRAU Jacksonville, Florida, and MTU 1012 NAMTRAU Whidbey Island, Washington.

(2) P-3C Aircraft Improvement Program. Initial training required to support the P-3C AIP has been completed. P-3C AIP aircrew transition training is complete with

the exception of IFT training converting AT 8262 IFTs to AT 9402 IFTs. P-3C AIP information has been incorporated into new follow-on aircrew courses that address both the P-3C Update III and the P-3C AIP Aircraft. Follow-on maintenance training plans have not been finalized.

(3) P-3C Block Modification Upgrade Program. Training for the P-3C BMUP Aircraft will consist of "difference training" for equipment and subsystems not included in the P-3C Update III Aircraft. Development of courseware for BMUP training began in FY00 and is expected to be delivered prior to delivery of the first operational P-3C BMUP Aircraft. Procurement of new and modification of existing Training Devices (TD) to the BMUP configuration is not planned. CBT will be used to the greatest extent and training will be facilitated using the P-3C BMUP Aircraft. Computer Aided Instructional (CAI) materials have been developed for the Reserve training program at Willow Grove for use in an instructor-led training scenario, while Interactive Courseware (ICW) is being developed for self-paced instruction at VP-30.

(4) P-3C Counter Drug Upgrade. Training for the P-3C CDU Aircraft at the fleet level will consist of "difference training" for equipment and subsystems not included in the P-3C Update III Aircraft. Procurement of new and modification of existing TDs to the CDU configuration are not planned. CBT will be used to the greatest extent possible and training will be facilitated using the CDU Aircraft.

b. Initial Training

(1) P-3C Update III. The prime contractor has completed all required initial training for OPEVAL, TECHEVAL, FOT&E, and cadre personnel. P-3C Update III Aircraft Operator transition training was provided to Fleet Aviation Specialized Training Group and FRS Instructors. Courses were tailored to the needs of experienced P-3C instructors transitioning to the P-3C Update III Aircraft. Training media included paper-based courseware and Acoustic Part Task Trainers (APTT). P-3C Update III Aircraft maintenance transition training was provided to MTU 1011 and MTU 1012 Instructors. Courses were tailored to the needs of experienced P-3C instructors transitioning to the P-3C Update III Aircraft. Training media included paper-based courseware and the Mini-Integrated Avionics Trainer (Mini-IAT).

(2) P-3C Aircraft Improvement Program. Initial training for the P-3C AIP Aircraft was provided in March 1996 for FOT&E personnel at NAWCAD Patuxent River and is complete. Initial training was provided at NAWCAD Patuxent River for VP-30 and MTU 1011 NAMTRAU Jacksonville Instructors in September 1996. VX-1 personnel were provided initial training prior to FOT&E in September 1996. This training was given on an as-required basis. All initial training for P-3C AIP Aircraft was conducted at NAWCAD Patuxent River.

(3) P-3C Block Modification Upgrade Program. Initial P-3C BMUP Aircraft training will consist of contractor conducted classes for prospective operator and maintenance personnel participating in FOT&E. Navy cadre training will be provided by the contractor. When more detailed information becomes available it will be included in updates to this NTSP.

(4) P-3C Counter Drug Upgrade. Formal operator training was developed by Logistics Services International (LSI) and is available through the VP-30 Fleet Project Team (FPT) with assistance from numbered Wings. Operator practice for AN/APG-66 is available in a computer-based format for use on the Aviation Multi-Purpose Electronic Warfare Trainer table top trainers. FPT and Wing-taught operator courseware addresses system familiarization, fundamentals of operation, and basic tactical application for the AN/AVX-1 and AN/APG-66(V) equipment. In-flight handbooks or job aids are provided as part of FPT and Wing training. Interactive practice in preflight and operating modes and a tactical operation is included in the AN/APG-66(V) operator training. For transitioning squadrons, extensive CBT for operators was conducted coincident with aircraft delivery.

c. Transition Training

(1) P-3C Update III. Students considered current in either P-3C Baseline, Update I, or Update II Aircraft required only those parts of transition training required to qualify them for their projected assignment in P-3C Update III Aircraft. Operator transition training was provided to fleet operators. Courses were tailored to the needs of P-3C experienced operators transitioning to the P-3C Update III Aircraft. Training media included paper-based courseware and APTT. P-3C Update III Aircraft maintenance transition training was provided to fleet maintenance personnel. Courses were tailored to the needs of P-3C experienced maintainers transitioning to the P-3C Update III Aircraft. Training media included paper-based courseware and Mini-IAT.

(2) P-3C Aircraft Improvement Program. P-3C AIP Aircraft transition training began with the VP-30 FIT in FY98 and is complete. Each P-3C Update III homebase (NAS Brunswick, NAS Jacksonville, NAS Whidbey Island, and MCB Kaneohe Bay) is equipped with a Computer Learning Center consisting of 12 to 16 computer stations for the familiarization and remediation of P-3 aircrew and maintenance systems and equipment. These centers provide training information on P-3C Update III Aircraft as well as P-3C AIP Aircraft. As the systems mature and more of the instruction is converted to CBT, the Wing Site based learning center approach will be increasingly utilized for both aircrew and maintenance refresher training.

All P-3C AIP aircrew transition training has been completed. P-3C AIP transition training is being provided for maintenance personnel who attend NAMTRAGRU course C-102-3600 (formerly C-646-3574) at NAS Patuxent River in order to complete training track D-102-6719 and receive NEC 6719. When a P-3C AIP Integrated Maintenance Trainer is procured and installed, follow-on AIP maintenance training will be held at MTU 1011, NAMTRAU Jacksonville. Each transition training class is comprised of four P-3C Update III qualified squadron aircrew and maintenance personnel. All P-3C AIP squadron aircrews are required to be trained before deploying. To date, plans for AIP maintenance training at NAMTRAU Whidbey Island have not been finalized. In the future, a second AIP IAT may be placed at MTU 1012 NAMTRAU Whidbey Island.

One formal transition-training course exists for IFTs as follows:

Title	**P-3C Aircraft Improvement Program (AIP) In-Flight Technician Category II**
CIN	D-050-1143
Model Manager....	VP-30
Description.....	This course provides training to the IFT transitioning from the P-3C Update III to the P-3C AIP Aircraft, including: ° In-flight Technician Duties and Responsibilities ° Electronic Systems ° In-flight Troubleshooting ° Emergency Procedures ° Ground Training Evolutions ° Tactical Training Flights ° NATOPS Procedures Upon completion, the student will be able to perform as a qualified IFT in the P-3C AIP Aircraft.
Location	VP-30, NAS Jacksonville
Length	54 days (VP-30: 51 days)
RFT date	Currently available
Skill identifier	AT 9402
TTE/TD.....	° AN/ALM-236A ESM Test Set ° AN/ARM-201 Ramp Test Set ° TTU-229 Radar Altimeter Warning Test Set ° T58002-105-00 HF Antenna Tensioner ° 62068 Magnetic Compensator Test Set
Prerequisites.....	° D-050-1131, P-3C Update III In-Flight Technician ° Q-050-1500, Naval Aircrew Candidate School ° D-050-1160, P-3C Update III In-Flight Observer ° C-100-2020, Avionics Common Core Class A1 ° C-100-2018, Avionics Technician O Level Class A1 ° Secret Security Clearance ° Current Medical Flight Duty Clearance ° Physiology Qualified IAW OPNAV Instruction (OPNAVINST) 3710.7

(3) P-3C Block Modification Upgrade Program. For transitioning squadrons, extensive CBT for aircrew personnel will occur 45 days prior to aircraft delivery.

(4) P-3C Counter Drug Upgrade. NA

d. Follow-on Training

(1) P-3C Update III. Fleet replacement personnel are assigned to the FRS and NAMTRAUs to receive basic instruction on the operation and maintenance of the P-3C Update III Aircraft. This consists of traditional paper-based media, CBT, and tactical, part task, maintenance, and proficiency TDs. P-3C Update III officer and enlisted aircrew training is established at the FRS, VP-30. Maintenance training is conducted at MTU 1011 NAMTRAU Jacksonville and MTU 1012 NAMTRAU Whidbey Island.

The follow-on training identified below and in element III.A.2.a of this document reflects training required to support the P-3C Update III Aircraft. It also reflects training to support ECPs or changes in maintenance concepts. Training track titles and lengths depicted throughout this document were obtained from VP-30 and Naval Air Maintenance Training Group Headquarters.

Title	**P-3C Update Replacement Pilot Category 4**
CIN	D-2A-1104
Model Manager....	VP-30
Description.....	This course provides training to the post command aviators in skills and techniques, including: ° Aircraft Systems ° Normal and Emergency NATOPS Procedures ° Navigation and Communication ° USW Tactics and Procedures ° Crew Coordination in Tactical Evolutions ° Flight Training, including: –Familiarization –Navigation –Crew Tactical Flights ° Simulator Training, including: –Cockpit Familiarization –Cockpit Procedures –Flight Simulation –Tactical Training Upon completion, the student will be able to perform as a NATOPS qualified Pilot in the P-3C Aircraft.
Location	VP-30, NAS Jacksonville
Length	15 days
RFT date	Currently available
Skill identifier	1311

TTE/TD.....	° P-3C Aircraft Operational Flight Trainer (OFT), TD 2F87 (F) ° P-3C AIP Tactical Aircrew Coordination Trainer (TACT), TD 2F179
Prerequisites.....	° Designated Naval Aviator ° Secret Security Clearance ° Current Medical Clearance Notice (NAVMED6410/2) ° Physiology Qualified IAW OPNAVINST 3710.7 ° D-2A-1101, P-3C Fleet Replacement Pilot Category I

Title	**P-3C Update Fleet Replacement Pilot Category I Pipeline**
CIN	D-2A-1111
Model Manager....	VP-30
Component Course.....	D-2A-1102, P-3C Update Replacement Pilot Category 1, 184 days
Description.....	This course provides training to the first tour fleet replacement Pilot, including: ° Flight Training ° Crew Tactics ° Crew Safety and Egression ° Armament Control ° Communication ° Radio/Radar Navigation ° NATOPS Procedures Upon completion, the student will be able to perform as a NATOPS qualified Copilot in the P-3C Aircraft.
Location.....	VP-30, NAS Jacksonville
Length.....	187 days
RFT date	Currently available
Skill identifier.....	1311

TTE/TD.....	° P-3C Aircraft Cockpit Procedures Trainer (CPT), TD 2C41 ° P-3C Aircraft OFT, TD 2F87 (F) ° P-3C Aircraft Tactical Operational Readiness Trainer (TORT), TD 2F140 ° P-3C Aircraft TORT, TD 2F140A ° P-3C AIP TACT, TD 2F179 ° P-3B Aircraft Cockpit Familiarization Trainer (CFT), TD 2C23 ° P-3C Aircraft CFT, TD 2C23A
Prerequisites.....	° Designated Naval Aviator ° Secret Security Clearance ° Current Medical Clearance Notice (NAVMED6410/2) ° Physiology Qualified IAW OPNAVINST 3710.7

Title	**P-3 Fleet Replacement Pilot Category 3 Pipeline**
CIN	D-2A-1112
Model Manager....	VP-30
Component Course.....	D-2A-1102, P-3C Pilot Category 3, 127 days
Description.....	This course provides training to the second tour fleet replacement Pilot, including: ° Flight Training ° Crew Tactics ° Crew Safety and Egression ° Armament Control ° Communication ° Radio/Radar Navigation ° NATOPS Procedures Upon completion, the student will be able to perform as a NATOPS qualified Pilot in the P-3C Aircraft.
Location.....	VP-30, NAS Jacksonville
Length.....	149 days
RFT date	Currently available
Skill identifier.....	1311

TTE/TD..... ° P-3C Aircraft CPT, TD 2C41
° P-3C Aircraft OFT, TD 2F87 (F)
° P-3C Aircraft TORT, TD 2F140
° P-3C Aircraft TORT, TD 2F140A
° P-3C AIP TACT, TD 2F179
° P-3B Aircraft CFT, TD 2C23
° P-3C Aircraft CFT, TD 2C23A

Prerequisites..... ° Designated Naval Aviator
° Secret Security Clearance
° Current Medical Clearance Notice (NAVMED6410/2)
° Physiology Qualified IAW OPNAVINST 3710.7
° D-2A-1101, P-3C Fleet Replacement Pilot Category I

Title ..... P-3C Update Replacement Pilot Category 5 (PCO/XO) Pipeline

CIN D-2A-1113

Model Manager.... VP-30

Component Course..... D-2B-1105, P-3C Fleet Pilot Category 5 Prospective Commanding/Executive Officer (PCO/PXO), 30 days

Description..... This course provides training to prospective commanding/executive officers in skills and techniques, including:

° Aircraft Systems
° Normal and Emergency NATOPS Procedures
° Navigation
° USW Tactics and Procedures
° Crew Coordination in Tactical Evolutions
° Simulator Training, including:
  –Cockpit Familiarization
  –Cockpit Procedures
  –Flight Simulation
  –Tactical Training

Upon completion, the student will be able to perform as a NATOPS qualified Pilot in the P-3C Aircraft.

Location..... VP-30, NAS Jacksonville

Length..... 30 days

RFT date ..... Currently available

Skill identifier..... 1311

TTE/TD.....	° P-3C Aircraft OFT, TD 2F87 (F) ° P-3C AIP TACT, TD 2F179
Prerequisites.....	° Designated Naval Aviator ° Secret Security Clearance ° Current Medical Clearance Notice (NAVMED6410/2) ° Previously qualified P-3C Patrol Plane Commander with a flying tour with the last 4 years.

Title	**P-3 Fleet Replacement Pilot (Non-USW) Category 1 Pipeline**
CIN	D-2A-1115
Model Manager....	VP-30
Component Course.....	D-2A-1004, P-3 Replacement Pilot (Non-USW) Category 1, 119 days
Description.....	This course provides training to the first tour fleet replacement Pilot, including: ° Flight Training ° Crew Tactics ° Crew Safety and Egression ° Armament Control ° Communication ° Radio/Radar Navigation ° NATOPS Procedures Upon completion, the student will be able to perform as a NATOPS qualified Copilot in the P-3 Aircraft.
Location.....	VP-30, NAS Jacksonville
Length.....	121 days
RFT date	Currently available
Skill identifier.....	1311
TTE/TD.....	° P-3C Aircraft CPT, TD 2C41 ° P-3C Aircraft Operational Flight Trainer (OFT), TD 2F87 (F) ° P-3C Aircraft TORT, TD 2F140 ° P-3C Aircraft TORT, TD 2F140A ° P-3C AIP TACT, TD 2F179 ° P-3B Aircraft CFT, TD 2C23 ° P-3C Aircraft CFT, TD 2C23A

Prerequisites.....	° Designated Naval Aviator ° Secret Security Clearance ° Current Medical Clearance Notice (NAVMED6410/2) ° Physiology Qualified IAW OPNAVINST 3710.7

Title	**P-3 Replacement Pilot Category 3 Pipeline**
CIN	D-2A-1116
Model Manager....	VP-30
Component Course.....	D-2B-1101, P-3 Replacement Pilot Category 3 79 days
Description.....	This course provides training to the second tour fleet replacement Pilot, including: ° Flight Training ° Crew Tactics ° Crew Safety and Egression ° Armament Control ° Communication ° Radio/Radar Navigation ° NATOPS Procedures Upon completion, the student will be able to perform as a NATOPS qualified Pilot in the P-3 Aircraft.
Location.....	VP-30, NAS Jacksonville
Length.....	OATMS: 137 days, NTMPS/CANTRAC: 94 days
RFT date	Currently available
Skill identifier.....	1311
TTE/TD.....	° P-3C Aircraft CPT, TD 2C41 ° P-3C Aircraft OFT, TD 2F87 (F) ° P-3C Aircraft TORT, TD 2F140 ° P-3C Aircraft TORT, TD 2F140A ° P-3C AIP TACT, TD 2F179 ° P-3B Aircraft CFT, TD 2C23 ° P-3C Aircraft CFT, TD 2C23A
Prerequisites.....	° Designated Naval Aviator ° Secret Security Clearance ° Current Medical Clearance Notice (NAVMED6410/2) ° Physiology Qualified IAW OPNAVINST 3710.7 ° D-2A-1004, P-3 Replacement Pilot Category I, **or** ° D-2A-1101, P-3C Fleet Replacement Pilot Category I

Title	**P-3C Pilot Instructor Under Training (IUT)**
CIN	D-2D-1105
Model Manager....	VP-30
Description.....	This course provides training in in-depth systems knowledge and instructional techniques to the prospective VP-30 Pilot Instructor, including: ° Navigation ° USW Tactics ° Weapons Delivery ° Crew Coordination ° Aircraft Systems ° Normal and Emergency Procedures ° VP-30 Instructional Techniques The IUT demonstrates his instructor ability during familiarization flights. At the completion of training, the student will be able to perform as a P-3C Pilot Instructor in VP-30.
Location	VP-30, NAS Jacksonville
Length	130 days
RFT date	Currently available
Skill identifier	1311
TTE/TD.....	° P-3C Aircraft CPT, TD 2C41 ° P-3C Aircraft OFT, TD 2F87 (F) ° P-3C Aircraft TORT, TD 2F140 ° P-3C Aircraft TORT, TD 2F140A ° P-3C AIP TACT, TD 2F179 ° P-3B Aircraft CFT, TD 2C23 ° P-3C Aircraft CFT, TD 2C23A
Prerequisites.....	° VP-30 Staff Member ° Designated Naval Aviator ° Secret Security Clearance ° Current Medical Clearance Notice (NAVMED6410/2) ° Physiology Qualified IAW OPNAVINST 3710.7 ° D-2A-1101, P-3C Fleet Replacement Pilot Category I

Title	**P-3C Naval Flight Officer (NFO) (TACCO) Category 4 (Post Command)**
CIN	D-2D-1107
Model Manager....	VP-30
Description.....	This course trains special syllabus Replacement Naval Flight Officers in skills and techniques required for designation as a NATOPS qualified Tactical Coordinator in P-3C model aircraft, with a thorough study of P-3C aircraft systems: ° TACCO Instructions and Procedures ° Navigation (includes Global Positioning) ° Communications (includes SATCOM, DAMA) ° Sensors and Data Processing: –SASP and Acoustic Submarine Identification –AIMS –Over-The-Horizon Targeting ° Armament and Ordnance (includes Maverick missile) ° Range Safety ° P-3C Crew and Aircraft Tactics ° Crew Safety and Egression ° NATOPS Procedures Upon completion, the student will be able to perform as a NATOPS qualified Senior TACCO in the P-3C aircraft.
Location	VP-30, NAS Jacksonville
Length	12 days
RFT date	Currently available
Skill identifier	1321
TTE/TD.....	° P-3C Aircraft SASP/TACCO Trainer, TD 14B53A ° P-3C Aircraft TORT, TD 2F140 ° P-3C Aircraft TORT, TD 2F140A ° P-3C AIP TACT, TD 2F179
Prerequisites.....	° Post Command ° Designated Naval Flight Officer (NFO) ° Secret Security Clearance ° Current Medical Clearance Notice (NAVMED6410/2) ° Physiology Qualified IAW OPNAVINST 3710.7

Title	**P-3C Fleet Replacement NFO Category I Pipeline**
CIN	D-2D-1111
Model Manager....	VP-30
Component Course.....	D-2D-1101, P-3 Fleet Replacement Naval Flight Officer Category 1 OATMS: 168 days, NTMPS/CANTRAC: 149 days
Description.....	This course provides training to the first tour Naval Flight Officer in skills and techniques, including: ° P-3C Navigation and Communication Systems, including Preflight and Operational Use ° Introduction to: –Oceanography –USW/ASUW Tactics –Acoustic Analysis –Tactical Systems Familiarization ° Crew Tactics ° Crew Safety and Egression ° NATOPS Procedures Academic training is augmented with Weapon System Trainers, device sessions, and flights on P-3C aircraft. Upon completion, the student will be able to perform as a NATOPS qualified Navigator/Communicator in the P-3C Aircraft.
Location.....	VP-30, NAS Jacksonville
Length.....	170 days
RFT date	Currently available
Skill identifier.....	1321
TTE/TD.....	° P-3C Aircraft Tactics Team Trainer Update II ° P-3C Aircraft TORT, TD 2F140 ° P-3C Aircraft TORT, TD 2F140A ° P-3C AIP TACT, TD 2F179
Prerequisites.....	° Designated NFO ° Secret Security Clearance ° Current Medical Clearance Notice (NAVMED6410/2) ° Physiology Qualified IAW OPNAVINST 3710.7

Title	**P-3C Replacement NFO Category 3 Pipeline**
CIN	D-2D-1112
Model Manager....	VP-30
Component Course.....	D-2D-1102, P-3 Replacement Naval Flight Officer Category 3 OATMS: 135 days, NTMPS/CANTRAC: 116 days
Description.....	This course provides training to the second tour Naval Flight Officer in skills and techniques, including: ° P-3C Aircraft Systems, including: –Navigation –Communication –Sensor –Armament and Ordnance –Data Processing Systems ° Re-introduction to: –Oceanography –USW/ASUW Tactics –ISAR and Acoustic Analysis Academic training is augmented with Weapon System Trainers, device sessions, and flights on P-3C aircraft. Upon completion, the student will be able to perform as a NATOPS qualified Tactical Coordinator in P-3C model aircraft.
Location.....	VP-30, NAS Jacksonville
Length.....	151 days
RFT date	Currently available
Skill identifier.....	1321
TTE/TD.....	° P-3C Aircraft SASP/TACCO Trainer, TD 14B53A ° P-3C Aircraft TORT, TD 2F140 ° P-3C Aircraft TORT, TD 2F140A ° P-3C AIP TACT, TD 2F179
Prerequisites.....	° Designated NFO ° Secret Security Clearance ° Current Medical Clearance Notice (NAVMED6410/2) ° Physiology Qualified IAW OPNAVINST 3710.7

Title	**P-3C Fleet Replacement NFO Category 4 Pipeline**
CIN	D-2D-1113
Model Manager....	VP-30
Component Course.....	D-2D-1115 P-3 Fleet Replacement Naval Flight Officer Category 4 Prospective Commanding/Executive Officer (PCO/PXO) OATMS: 37 days, NTMPS/CANTRAC: 32 days
Description.....	This course provides training to the special syllabus Naval Flight Officer in skills and techniques, including: ° P-3C Aircraft Systems, including: –Navigation –Communication –Sensor –Armament and Ordnance –Data Processing Systems ° Re-introduction to: –Oceanography –ASUW tactics –Acoustic Analysis Academic training is augmented with simulator training and during actual flights on P-3C aircraft. Upon completion, the student will be able to perform as a NATOPS qualified Tactical Coordinator in P-3C model aircraft.
Location.....	VP-30, NAS Jacksonville
Length.....	39 days
RFT date	Currently available
Skill identifier.....	1321
TTE/TD.....	° P-3C Aircraft SASP/TACCO Trainer, TD 14B53A ° P-3C Aircraft TORT, TD 2F140 ° P-3C Aircraft TORT, TD 2F140A ° P-3C AIP TACT, TD 2F179
Prerequisites.....	° PCO or PXO Designated NFO ° Secret Security Clearance ° Current Medical Clearance Notice (NAVMED6410/2) ° Physiology Qualified IAW OPNAVINST 3710.7

Title	**P-3 Flight Engineer Instructor Under Training (IUT)**
CIN	D-050-1003
Model Manager....	VP-30
Description.....	This course provides training to the P-3 Flight Engineer, including: Ground Phase: ° Detailed Aircraft Systems/Operations ° Flight Simulation ° Normal and Emergency Procedures ° Pre-flight/Post-flight/Daily Functions ° Aircraft Servicing ° Crew Duties and Coordination Flight Phase: ° Instructor Under Training Simulators ° In-flight Systems and Teaching Procedures Aircraft systems are reviewed and discussed to ensure adherence to NATOPS, applicable training, and maintenance directives. Upon completion, the student will be able to perform as a NATOPS qualified VP-3 Instructor Flight Engineer in the P-3C model Aircraft.
Location	VP-30, NAS Jacksonville
Length	92 days
RFT date	Currently available
Skill identifier	IUT is always a standalone (not a pipeline) course and does not award an NEC.
TTE/TD.....	° P-3C Aircraft CPT, TD 2C41 ° P-3C Aircraft OFT, TD 2F87 (F) ° P-3C AIP TACT, TD 2F179 ° P-3B Aircraft CFT, TD 2C23 ° P-3C Aircraft CFT, TD 2C23A
Prerequisites.....	° Prior NATOPS Qualification as a P-3 Flight Engineer with NEC 8251 ° Secret Security Clearance ° Current Medical Flight Duty Clearance ° Physiology Qualified IAW OPNAVINST 3710.7

Title	**P-3 Fleet Replacement Flight Engineer Category 3 Pipeline**
CIN	D-050-1008
Model Manager....	VP-30
Component Course.....	D-050-1002, P-3 Replacement Flight Engineer Category 3 OATMS: 77 days, NTMPS/CANTRAC: 75 days
Description.....	This course provides training to the second tour Flight Engineer, including: ° Detailed Aircraft Systems ° Normal and Emergency Procedures ° Performance ° Weight and Balance Calculations ° Preflight/Postflight Procedures ° Servicing ° Survival Equipment ° NATOPS Procedures (NATOPS evaluation included) Upon completion, the student will be able to perform as a NATOPS qualified Flight Engineer in P-3 Aircraft.
Location.....	VP-30, NAS Jacksonville
Length.....	79 days
RFT date	Currently available
Skill identifier.....	8251 (Eligible ratings: AD, AM, AE, AO, AT, AF, AV)
TTE/TD.....	° P-3C Aircraft CPT, TD 2C41 ° P-3C Aircraft OFT, TD 2F87 (F) ° P-3C AIP TACT, TD 2F179 ° P-3B Aircraft CFT, TD 2C23 ° P-3C Aircraft CFT, TD 2C23A
Prerequisites.....	° Prior NATOPS Qualification as a P-3 Flight Engineer with NEC 8251 ° D-050-1010, P-3 Replacement Flight Engineer Cat 1 ° Secret Security Clearance ° Current Medical Flight Duty Clearance ° Physiology Qualified IAW OPNAVINST 3710.7

Title	**P-3 Replacement Flight Engineer Category 1 Pipeline**
CIN	D-050-1010
Model Manager....	VP-30
Component Course.....	D-050-1004, P-3 Replacement Flight Engineer Category 1 OATMS: 196 days, NTMPS/CANTRAC: 184 days
Description.....	This course provides training to the first tour Flight Engineer, including: ° Detailed Aircraft Systems ° Normal and Emergency Procedures ° Performance ° Weight and Balance Calculations ° Preflight/Postflight Procedures ° Servicing ° Survival Equipment ° NATOPS Procedures ° Observer and Flight Engineer NATOPS Evaluation Upon completion, the student will be able to perform as a NATOPS qualified Flight Engineer in P-3 model Aircraft.
Location.....	VP-30, NAS Jacksonville
Length.....	233 days
RFT date	Currently available
Skill identifier.....	NEC 8251 (Eligible ratings: AD, AE, AM, AO, AT)
TTE/TD.....	° P-3C Aircraft CPT, TD 2C41 ° P-3C Aircraft OFT, TD 2F87 (F) ° P-3C AIP TACT, TD 2F179 ° P-3B Aircraft CFT, TD 2C23 ° P-3C Aircraft CFT, TD 2C23A
Prerequisites.....	° E-5 or above, E-4 with Commanding Officer endorsement ° Q-050-1500, Naval Aircrew Candidate School ° C-050-3531, P-3 Flight Engineer System Familiarization ° Secret Security Clearance ° Current Medical Flight Duty Clearance ° Physiology Qualified IAW OPNAVINST 3710.7

Title	**P-3C Update III In-Flight Technician Category 1 Pipeline**
CIN	D-050-1130
Model Manager....	VP-30
Component Course (First).....	D-050-1131, P-3C In-Flight Technician Category 1, 151 days
Description.....	This curriculum provides the entry level AT aircrew candidate Fleet Replacement In-flight Technician with a comprehensive study of P-3C aircraft: ° In-flight Ordnance Crewmember Qualifications ° IFT Duties and Responsibilities ° Electronic Systems ° In-flight Procedures The student receives classroom instruction and practical application of that instruction aboard an aircraft on the ground and performs actual IFT duties on navigation and tactical flights. Upon completion, the student will be able to perform as a qualified In-Flight Technician in the P-3C Update III Aircraft.
Component Course (Second) ..	D-050-1143, P-3 ASUW Improvement Program (AIP) In-Flight Technician Category II, 54 days
Description.....	This curriculum provides training to previously qualified Fleet Replacement In-flight Technicians (IFTs) transitioning to the P-3C AIP aircraft and includes: ° In-flight Technician Duties and Responsibilities ° Electronic Systems ° In-flight Troubleshooting ° Emergency Procedures The student receives classroom instruction and practical application of that instruction by performing In-flight Technician duties aboard aircraft during ground training evolutions and on tactical training flights. Upon completion, the student will be able to perform as a qualified In-Flight Technician in the P-3C AIP Aircraft.
Location.....	VP-30, NAS Jacksonville
Length.....	OATMS: 183 days, NTMPS/CANTRAC: 240 days
RFT date	Currently available

Skill identifier.....	9402
TTE/TD.....	° AN/ALM-236A ESM Test Set ° AN/ARM-201 Ramp Test Set ° TTU-229 Radar Altimeter Warning Test Set ° T58002-105-00 HF Antenna Tensioner ° 62068 Magnetic Compensator Test Set
Prerequisites.....	° Q-050-1500, Naval Aircrew Candidate School ° D-050-1160, P-3C Update III In-Flight Observer ° C-100-2020, Avionics Common Core Class A1 ° C-100-2018, Avionics Technician O Level Class A1 ° Secret Security Clearance ° Current Medical Flight Duty Clearance ° Physiology Qualified IAW OPNAVINST 3710.7

Title	**P-3C Fleet Replacement Non-Acoustic Operator Category 1 Pipeline**
CIN	D-050-1132
Model Manager....	VP-30
Component Course.....	D-210-1151, P-3C Fleet Replacement Non-Acoustic Operator Category 1 (OATMS: 133 days, NTMPS/CANTRAC: 127 days)
Description.....	This course provides training to the qualifying P-3C Non-acoustic Operator AW, including: ° Patrol Squadron Indoctrination ° Aircraft Familiarization ° Non-Acoustic Systems Operation ° Electronic Warfare Signal Analysis and Troubleshooting ° Radar Operations ° Magnetic Anomaly Detection (MAD) Operations ° ESM Operations ° AN/ALM-236A ESM Test Set ° Non-Acoustic Grading ° NATOPS Procedures Other pipeline component courses: ° D-210-1700, Basic ISAR Image Interpretation ° D-050-1147, Basic Electronic Warfare ° D-210-0039, ULQ-16 (V)2 Pulse Analyzation ° D-050-1160, P-3 Series In-flight Observer Upon completion, the student will be able to perform as a NATOPS qualified Non-Acoustic Operator in the P-3C Update III and AIP Aircraft.
Location.....	VP-30, NAS Jacksonville
Length.....	199 days
RFT date	Currently available
Skill identifier.....	AW 7861
TTE/TD.....	° P-3C Radar/MAD/ESM Operator Trainer, TD 14B40A ° P-3C Aircraft TORT, TD 2F140 ° P-3C Aircraft TORT, TD 2F140A ° P-3C AIP TACT, TD 2F179

Prerequisites..... ° Q-050-1500, Naval Aircrew Candidate School
° C-210-2010, Aviation Warfare Systems Operator Class "A"
° Secret Security Clearance
° Current Medical Flight Duty Clearance
° Physiology Qualified IAW OPNAVINST 3710.7

Title ..... P-3C Non-Acoustic Operator Instructor Under Training (IUT)

CIN D-050-1133

Model Manager.... VP-30

Description..... This course provides training to the second tour P-3C Non-Acoustic Sensor Station Operator AW on Observer and Non-Acoustic systems, including:

° Operation of Non-Acoustic Sensor Station
° Radar Operations
° Magnetic Anomaly Detection (MAD) Operations
° ESM Operations
° AN/ALM-236A ESM Test Set
° Non-Acoustic Grading
° NATOPS Procedures

The IUT is also introduced to FRS instructor training skills along with a review of the P-3C aircraft tactical stations.

Upon completion, the student will be able to perform as a NATOPS qualified Non-Acoustic Operator Instructor in the P-3C Aircraft.

Location ..... VP-30, NAS Jacksonville

Length ..... (OATMS: 67 days, NTMPS/CANTRAC: 60 days)

RFT date ..... Currently available

Skill identifier ..... AW, no NEC assigned. This is a stand-alone course (not a pipeline).

TTE/TD..... ° P-3C Aircraft Radar/MAD/ESM Operator Trainer, TD 14B40A
° P-3C Aircraft TORT, TD 2F140
° P-3C Aircraft TORT, TD 2F140A
° P-3C AIP TACT, TD 2F179

Prerequisites..... ° NEC 7861
° B-9E-1225, Naval Aviation Water Survival Program R2
° B-322-0040, Refresher Aerospace Physiology Maritime Training
° D-050-1132, P-3C Non-Acoustic Operator Category 1 Pipeline
° A-012-0012, Instructor Training Paper-Based
° Secret Security Clearance
° Current Medical Clearance Notice (NAVMED6410/2)
° Physiology Qualified IAW OPNAVINST 3710.7

Title ..... P-3C In-Flight Technician Instructor Under Training (IUT)

CIN D-050-1134

Model Manager.... VP-30

Description..... This course provides the training necessary to the P-3C Update III In-flight Technician for initial qualification as a Instructor, including:

° Aircraft Systems and Circuit Breaker Location
° Operational Preflight, Troubleshooting Techniques
° Data Processing Hardware and Software
° Observer Duties, Responsibilities, and Procedures
° NATOPS Procedures

Academic training is augmented by ground training device sessions, navigational flights, and USW tactical flights. This allows the IUT an opportunity to practically apply skills as an instructor. Both ground and flight phases are used to facilitate prospective instructor expertise in P-3C systems and procedures and to establish the highest possible degree of standardization among instructors, the instructional system concept of training, the content and format of appropriate instructional materials, and the development of instructor technique.

Upon completion, the student will be able to perform as a NATOPS qualified Non-Acoustic Operator Instructor in the P-3C Aircraft.

Location ..... VP-30, NAS Jacksonville

Length ..... 38 days

RFT date ..... Currently available

Skill identifier ..... No NEC assigned. Stand-alone course (not a pipeline).

TTE/TD..... ° P-3C Aircraft Radar/MAD/ESM Operator Trainer, TD 14B40A
° P-3C Aircraft TORT, TD 2F140
° P-3C Aircraft TORT, TD 2F140A
° P-3C AIP TACT, TD 2F179

Prerequisites..... ° NEC 9402
° B-9E-1225, Naval Aviation Water Survival Program R2
° B-322-0040, Refresher Aerospace Physiology Maritime Training
° D-050-1130, P-3C In-Flight Maintenance (Update III) Category 1
° Secret Security Clearance

Title ..... P-3C Update III Non-Acoustic Operator Category 3 Pipeline

CIN D-050-1136

Model Manager.... VP-30

Component Course..... D-050-1135 P-3C Update Non-Acoustic Operator Category 3
OATMS: 58 days, NTMPS/CANTRAC: 75 days

Description..... This course provides training to the second tour re-qualifying Non-Acoustic Sensor Operator AW, including:

° Patrol Squadron Indoctrination
° Non-Acoustic Sensor Station Operation and Basic Troubleshooting
° Radar Operations
° ESM Operations
° Electronic Warfare Signal Analysis
° Non-Acoustic Grading
° NATOPS Procedures

Emphasis is placed on timely, accurate analysis of non-acoustic data plus a detailed understanding of RADAR equipment. Practical application of academic knowledge is presented through SS-3 Positional Trainers, Weapon System Trainers, and Crew Tactical Flights on P-3C aircraft.

Upon completion, the student will be able to perform as a NATOPS qualified Non-Acoustic Operator in the P-3C Update III and AIP Aircraft.

Location..... VP-30, NAS Jacksonville

Length.....	60 days
RFT date	Currently available
Skill identifier.....	No NEC assigned. This is a refresher course.
TTE/TD.....	° P-3C Aircraft Radar/MAD/ESM Operator Trainer, TD 14B40A ° P-3C Aircraft TORT, TD 2F140 ° P-3C Aircraft TORT, TD 2F140A ° P-3C AIP TACT, TD 2F179
Prerequisites.....	° Prior NATOPS Qualification as a P-3 Non-Acoustic Operator ° NEC 7861 ° Q-050-1500, Naval Aircrew Candidate School ° C-210-2010, Aviation Warfare Systems Operator Class "A" ° D-050-1132, P-3C Non-Acoustic Operator Category 1 Pipeline ° Secret Security Clearance ° Current Medical Flight Duty Clearance ° Physiology Qualified IAW OPNAVINST 3710.7

Title	**P-3C Update III Acoustic Sensor Operator Category 3 Pipeline**
CIN	D-050-1140
Model Manager....	VP-30
Component Course.....	D-050-1139, P-3C Update/ASUW Improvement Program (AIP) Acoustic Operator Category 3, 46 days
Description.....	This course provides training to the second tour Acoustic Sensor Station Operator AW, including: ° Operation of Acoustic Sensor Stations ° SASP ° Principles of LOFARgram Analysis ° Acoustic Submarine Identification ° NATOPS Procedures Upon completion, the student will be able to perform as a NATOPS qualified Acoustic Operator in the P-3C Update III and AIP Aircraft.
Location.....	VP-30, NAS Jacksonville
Length.....	50 days

RFT date	Currently available
Skill identifier	No NEC assigned.
TTE/TD.....	° P-3C Aircraft SASP/TACCO Trainer, TD 14B53A ° P-3C Aircraft TORT, TD 2F140 ° P-3C Aircraft TORT, TD 2F140A ° P-3C AIP TACT, TD 2F179
Prerequisites.....	° Prior NATOPS Qualification as a P-3 Acoustic Operator ° NEC 7841 ° Secret Security Clearance ° Current Medical Flight Duty Clearance ° Physiology Qualified IAW OPNAVINST 3710.7

Title	**P-3C Update III In-Flight Technician Category 3 Pipeline (Refresher)**
CIN	D-050-1150
Model Manager....	VP-30
Component Course.....	D-050-1149, P-3C In-Flight Technician Refresher OATMS: 60 days, NTMPS/CANTRAC: 38 days
Description.....	This course provides refresher training to the previously qualified Fleet Replacement P-3C Update III IFT and initial and initial or refresher Ordnance Qualified Crewmember training, including: ° Observer Duties and Responsibilities ° In-Flight Technician Duties ° Electronic Systems ° In-Flight Troubleshooting ° Ordnance Qualified Crewmember Duties ° Emergency Procedures ° NATOPS Procedures The student that receives classroom instruction and practical application of that instruction by performing In-flight Technician duties aboard aircraft during ground training evolutions and on tactical training flights. Upon completion, the student will be able to perform as a qualified In-Flight Technician in the P-3C Update III Aircraft.
Location	VP-30, NAS Jacksonville
Length.....	64 days

RFT date ..... Currently available

Skill identifier..... No NEC assigned.

TTE/TD..... ° AN/ALM-236A ESM Test Set
° AN/ARM-201 Ramp Test Set
° TTU-229 Radar Altimeter Warning Test Set
° T58002-105-00 HF Antenna Tensioner
° 62068 Magnetic Compensator Test Set

Prerequisites..... ° Q-050-1500, Naval Aircrew Candidate School
° C-100-2020, Avionics Common Core Class A1
° D-050-1130, P-3C In-Flight Maintenance (Update III) Category 1
° Secret Security Clearance
° Current Medical Flight Duty Clearance
° Physiology Qualified IAW OPNAVINST 3710.7

Title ..... P-3C APS-115 Weather Avoidance and Radar Safety of Flight Operator

CIN D-050-1161

Model Manager.... VP-30

Description..... This course provides training to the replacement P-3 Weather Avoidance-Radar Safety of Flight Operator, including:

° Weather Recognition/Action Chart Utilization
° Basic RADAR Theory Fundamentals
° RADAR and IFF Systems
° Circuit Breaker Locations
° Emergency Procedures
° Crew Tactics
° Crew Safety and Egression
° NATOPS Procedures

The course combines classroom instruction with aircraft demonstrations, 14B40 trainer periods, and weather avoidance.

Upon completion, the student will be able to perform as a qualified Weather Avoidance-Radar Safety of Flight Operator in AN/APS-115 equipped P-3 Aircraft.

Location..... VP-30, NAS Jacksonville

Length..... OATMS: 24 days, NTMPS/CANTRAC: 22 days

RFT date	Currently available
Skill identifier.....	AW, no NEC assigned.
TTE/TD.....	° P-3C Aircraft Radar/MAD/ESM Operator Trainer, TD 14B40A
Prerequisites.....	° D-210-1033, P-3B Electronic Warfare Operator Familiarization ° Qualified Naval Aircrewman. ° Observer qualified in P-3C series aircraft ° AW Rating ° Q-050-1500, Naval Aircrew Candidate School ° Current Medical Flight Duty Clearance ° Physiology Qualified IAW OPNAVINST 3710.7

Title	**P-3C Update III Acoustic Operator Category 1 Pipeline**
CIN	D-050-1230
Model Manager....	VP-30
Component Course.....	D-210-1130, P-3C Update III Acoustic Operator Category 1 OATMS: 141 days, NTMPS/CANTRAC: 117 days
Description.....	[Titles in OATMS need updating from old version "P-3C Update / ASUW Improvement Program (AIP) Acoustic Operator…"] This course provides training to the qualifying P-3C Update III Acoustic Operator AW, including: ° Acoustic Systems ° Oceanography ° USW Tactics ° Crew Coordination ° Emergency Procedures ° NATOPS Procedures Other pipeline component course: ° D-050-1160, P-3 Series In-Flight Observer Academic training is augmented with Weapon system Trainers, Part Task Trainers, and flights on the P-3C Update III model Aircraft. Upon completion, the student will be able to perform as a NATOPS qualified Acoustic Operator in the SASP/C4.7.1 equipped P-3C Aircraft.

Location ..... VP-30, NAS Jacksonville

Length ..... 172 days

RFT date ..... Currently available

Skill identifier 7841

TTE/TD..... ° P-3C Aircraft SASP/TACCO Trainer, TD 14B53A
° P-3C Aircraft TORT, TD 2F140
° P-3C Aircraft TORT, TD 2F140A
° P-3C AIP TACT, TD 2F179

Prerequisites..... ° D-2D-0039, Survival, Evasion, Resistance, and Escape
° Q-050-1500, Naval Aircrew Candidate School
° C-210-2010, Aviation Warfare Systems Operator Class "A"
° Secret Security Clearance
° Current Medical Flight Duty Clearance
° Physiology Qualified IAW OPNAVINST 3710.7

Title ..... P-3C Update III Acoustic Operator Instructor Under Training (IUT)

CIN D-210-1138

Model Manager.... VP-30

Description..... This course provides training to the second tour P-3C Non-Acoustic Sensor Station Operator AW on Observer and Non-Acoustic systems, including:

° Operation of Acoustic Sensor Stations
° SASP
° Principles of LOFARgram Analysis
° Acoustic Submarine Identification
° NATOPS Procedures

The IUT is also introduced to FRS instructor training skills along with a review of the P-3C aircraft tactical stations.

Upon completion, the student will be able to perform as a NATOPS qualified Acoustic Operator Instructor in the P-3C Aircraft.

Location ..... VP-30, NAS Jacksonville

Length ..... OATMS: 67 days, NTMPS/CANTRAC: 60 days

RFT date ..... Currently available

Skill identifier ..... No NEC assigned. IUT is a stand-alone course.

TTE/TD..... ° P-3C Aircraft SASP/TACCO Trainer, TD 14B53A
° P-3C Aircraft TORT, TD 2F140
° P-3C Aircraft TORT, TD 2F140A
° P-3C AIP TACT, TD 2F179

Prerequisites..... ° Q-050-1500, Naval Aircrew Candidate School
° C-210-2010, Aviation Warfare Systems Operator Class A
° NEC 7841
° Previously NATOPS qualified P-3C Update III Sensor Station 1 and 2 Operator
° Previously qualified/designated IAW NAVEDTRA 43433-16 PQS for P-3C Update III Acoustic Operator
° A-012-0011, Navy Group Paced Instructor Course
° Secret Security Clearance
° Current Medical Flight Duty Clearance
° Physiology Qualified IAW OPNAVINST 3710.7

Title ..... P-3C Weapon Systems Initial Organizational Maintenance

CIN D/E-102-1029

Model Manager ... MTU 1011 NAMTRAU Jacksonville

Description ..... This track provides training to the first tour AT, including:
° Troubleshooting
° Signal Processors
° Magnetic Anomaly Detection (MAD) Systems
° AN/ASQ-212 Computers
° AN/ASH-33A Magnetic Tape System
° AN/ASA-66 and AN/ASA-70 Display Systems
° Navigation Systems
° Communication Systems

Upon completion, the student will be able to perform basic organizational maintenance on the P-3C avionics systems in a squadron environment under direct supervision.

Locations ..... ° MTU 1011 NAMTRAU Jacksonville
° MTU 1012 NAMTRAU Whidbey Island

Length ..... 123 days

RFT date ..... Currently available

Skill identifier ..... AT 8819

TTE/TD ..... P-3C Update III Aircraft Weapon Systems Maintenance Trainer Mock-ups, P-3C Update III IAT

Prerequisite ..... C-100-2018, Avionics Technician O Level Class A1

Title ..... P-3C Weapon Systems Career Organizational Maintenance Track

CIN D/E-102-1132

Model Manager ... MTU 1011 NAMTRAU Jacksonville

Component Course..... C-102-9587, P-3C Avionics (Career) Organizational Level Maintenance (37 days)

Description ..... This track provides training to the second tour AT, including:

- ° Troubleshooting
- ° Signal Processors
- ° MAD Systems
- ° AN/ASQ-212 Computers
- ° AN/ASH-33A Magnetic Tape System
- ° AN/ASA-66 and AN/ASA-70 Display Systems
- ° Navigation Systems
- ° Communication Systems

Upon completion, the student will be able to perform organizational maintenance on the P-3C avionics systems in a squadron environment under limited supervision.

Locations ..... ° MTU 1011 NAMTRAU Jacksonville
° MTU 1012 NAMTRAU Whidbey Island

Length ..... 39 days

RFT date ..... Currently available

Skill identifier ..... AT 8319

TTE/TD ..... P-3C Update III Aircraft Weapon Systems Maintenance Trainer Mock-ups, P-3C Update III IAT

Prerequisite ..... D/E-102-1029, P-3C Initial Weapon Systems Organizational Maintenance

Title ..... P-3 Power Plants and Related Systems Initial Organizational Maintenance

CIN D/E-601-1011

Model Manager ... MTU 1011 NAMTRAU Jacksonville

Description ..... This track provides training to the first tour AD, including:

- Troubleshooting
- Torque Meters
- Reduction Gear Assemblies
- Oil Systems
- Fuel Systems
- Bleed Air Systems
- Ignition Systems
- APU
- Propeller
- Engine Driven Compressor (EDC)
- Power Section

Upon completion, the student will be able to perform basic organizational maintenance on P-3C power plants and related systems in a squadron environment under direct supervision.

Locations .....
- MTU 1011 NAMTRAU Jacksonville
- MTU 1012 NAMTRAU Whidbey Island

Length ..... 33 days

RFT date ..... Currently available

Skill identifier ..... AD 8819

TTE/TD ..... Refer to elements IV.A.1 and IV.A.2 for more information.

Prerequisites .....
- C-601-2011, Aviation Machinist's Mate Common Core Class A1
- C-601-2013, Aviation Machinist's Mate Turboprop Fundamentals Strand Class A1

Title ..... P-3 Career Power Plants and Related Systems Career Organizational Maintenance

CIN D/E-601-1110

Model Manager ... MTU 1011 NAMTRAU Jacksonville

Description ..... This track provides training to the second tour AD, including:

- ° Troubleshooting
- ° Torque Meters
- ° Tailpipes
- ° Reduction Gear Assemblies
- ° Oil Systems
- ° Fuel Systems
- ° Bleed Air Systems
- ° Ignition Systems
- ° APU
- ° Propeller Balance
- ° Propeller
- ° Engine Driven Compressor (EDC)
- ° Power Section
- ° Belding Engine Performance

Upon completion, the student will be able to perform organizational maintenance on P-3C power plants and related systems in a squadron environment under limited supervision.

Locations ..... ° MTU 1011 NAMTRAU Jacksonville
° MTU 1012 NAMTRAU Whidbey Island

Length ..... 16 days

RFT date ..... Currently available

Skill identifier ..... AD 8319

TTE/TD ..... Refer to elements IV.A.1 and IV.A.2 for detailed information.

Prerequisite ..... C-601-1011, P-3 Initial Power Plants and Related Systems Organizational Maintenance

Title ..... P-3C Electrical and Instrument Systems Initial Organizational Maintenance

CIN D/E-602-1054

Model Manager ... MTU 1011 NAMTRAU Jacksonville

Description ..... This track provides training to the first tour AE, including:

- ° Troubleshooting
- ° APU Electrical Systems
- ° Fire Detection/Extinguishing Systems
- ° AC/DC Power Generation and Distribution Systems
- ° Power Plants and Airframes Related Electrical Systems
- ° Fuel and Fuel Quantity Indicator Systems
- ° Instruments
- ° Inertial Navigation Systems (INS)
- ° Automatic Flight Control Systems (AFCS)

Upon completion, the student will be able to perform basic organizational maintenance on P-3C electrical and instrument systems in a squadron environment under direct supervision.

Locations ..... ° MTU 1011 NAMTRAU Jacksonville
° MTU 1012 NAMTRAU Whidbey Island

Length ..... 47 days

RFT date ..... Currently available

Skill identifier ..... AE 8819

TTE/TD ..... NA

Prerequisites ..... ° C-100-2020, Avionics Common Core Class A1
° C-602-2039, Aviation Electrician's Mate O Level Strand Class A1

Title	**P-3 Airframe and Hydraulic Systems Career Organizational Maintenance**
CIN	D/E-602-1080
Model Manager ...	MTU 1011 NAMTRAU Jacksonville
Description	This track provides training to the second tour AM, including: ° Troubleshooting ° Fuel Cells ° Hydraulic Power Supply ° Bomb Bay Doors ° Windshield Wiper System ° Brakes ° Nose Wheel Steering ° Flight Controls and Landing Gear Upon completion, the student will be able to perform organizational level maintenance on P-3C airframe and hydraulic systems in a squadron environment under limited supervision.
Locations	° MTU 1011 NAMTRAU Jacksonville ° MTU 1012 NAMTRAU Whidbey Island
Length	24 days
RFT date	Currently available
Skill identifier	° AM 8319
TTE/TD	Refer to elements IV.A.1 and IV.A.2 for detailed information.
Prerequisite	D/E-602-1081, P-3C Initial Airframes and Hydraulic Systems Organizational Maintenance

Title ..... P-3 Airframe and Hydraulic Systems Initial Organizational Maintenance

CIN D/E-602-1081

Model Manager ... MTU 1011 NAMTRAU Jacksonville

Description ..... This track provides training to the first tour AM, including:

- Troubleshooting
- Fuel Cells
- Hydraulic Power Supply
- Bomb Bay Doors
- Windshield Wiper System
- Brakes
- Nose Wheel Steering

Upon completion, the student will be able to perform basic organizational level maintenance on P-3C airframe and hydraulic systems in a squadron environment under direct supervision.

Locations ..... ° MTU 1011 NAMTRAU Jacksonville
° MTU 1012 NAMTRAU Whidbey Island

Length ..... 15 days

RFT date ..... Currently available

Skill identifier ..... ° AM 8819

TTE/TD ..... Refer to elements IV.A.1 and IV.A.2 for detailed information.

Prerequisites ..... ° C-603-0175, Aviation Structural Mechanic (Hydraulics and Structures) Common Core Class A1
° C-603-0176, Aviation Structural Mechanic (Hydraulics and Structures) Strand Class A1

Title ..... P-3C Electrical and Instrument Systems Career Organizational Maintenance

CIN D/E-602-1151

Model Manager ... MTU 1011 NAMTRAU Jacksonville

Description ..... This track provides training to the second tour AE, including:

- Troubleshooting
- APU Electrical Systems
- Fire Detection/Extinguishing Systems
- AC/DC Power Generation and Distribution Systems
- Power Plants and Airframes Related Electrical Systems
- Fuel and Fuel Quantity Indicator Systems
- Instruments
- INS
- AFCS

Upon completion, the student will be able to perform organizational maintenance on P-3C electrical and instrument systems in a squadron environment under limited supervision.

Locations ..... ° MTU 1011 NAMTRAU Jacksonville
° MTU 1012 NAMTRAU Whidbey Island

Length ..... 23 days

RFT date ..... Currently available

Skill identifier ..... AE 8319

TTE/TD ..... Refer to elements IV.A.1 and IV.A.2 for detailed information.

Prerequisite ..... D-602-1054, P-3C Initial Electrical and Instrumental Systems Organizational Maintenance

Title	**P-3 Environmental Systems Organizational Maintenance**
CIN	D/E-602-1161
Model Manager ...	MTU 1011 NAMTRAU Jacksonville
Description	This track provides training to the AME, including: ° Troubleshooting ° Air Conditioning Systems ° Engine Driven Compressor ° Utility Systems ° Pressurization Systems ° Windshield Washer System ° Wing Anti-Ice System ° Bomb Bay Heating System ° Oxygen System Upon completion, the student will be able to perform organizational level maintenance on P-3C environmental systems in a squadron environment under limited supervision.
Locations	° MTU 1011 NAMTRAU Jacksonville ° MTU 1012 NAMTRAU Whidbey Island
Length	23 days
RFT date	Currently available
Skill identifier	AME 8319
TTE/TD	P-3C Update III Aircraft Environmental Maintenance Trainer Mock-ups
Prerequisite	C-602-2034, Aviation Structural Mechanic E (Safety Equipment) Egress Strand Class A1

Title	**P-3 Armament/Ordnance Systems Integrated Organizational Maintenance**
CIN	D/E-646-1140
Model Manager....	MTU 1011 NAMTRAU Jacksonville
Component Course.....	C-646-9571, P-3C Armament/Ordnance System Organizational Maintenance OATMS: 23 days, NTMPS/CANTRAC: 18 days
Description	This track provides training to the second tour AO, including: ° Troubleshooting ° Harpoon Airborne Command and Launch Control System (HACLCS) ° Maverick Missile Launch System ° SLAM Missile Launch System ° Chaff Countermeasures System ° Sonobuoy Launch System The following 12 day component course is known by two different CINs depending on location: Component Course: *CIN: C-646-3573, (MTU 1012) P-3 Conventional Weapons Loading Course* Component Course: *CIN: D-646-1143, (MTU 1011) P-3 Conventional Weapons Loading Course* Upon completion, the student will be able to perform organizational level maintenance on P-3C armament systems in a squadron environment under limited supervision.
Locations	° MTU 1011 NAMTRAU Jacksonville ° MTU 1012 NAMTRAU Whidbey Island
Length	43 days
RFT date	Currently available
Skill identifier	AO 8319
TTE/TD	P-3C Update III Aircraft Armament Maintenance Trainer Mock-ups
Prerequisite	D/E-646-1042, P-3 Initial Armament Systems Organizational Maintenance

Title	**P-3 Conventional Weapons Loading Refresher**
CIN	D-646-1144
Model Manager....	Fleet Aviation Specialized Operational Training Group Detachment (FASOTRAGRU DET) Jacksonville
Description	This track provides training to the prospective Weapons Loading Team member, including ° Fundamentals of Weapons Characteristics ° Handling Equipment Safety ° Release and Control System Verification Test Equipment ° Release and Control System Verification ° Conventional Weapons Loading Procedures Upon completion, the student will be able to perform as a P-3 Conventional Weapons Loading Team member in a squadron environment under direct supervision.
Locations	° FASOTRAGRU DET Jacksonville ° FASOTRAGRU DET Brunswick
Length	5 days
RFT date	Currently available
Skill identifier	No NEC assigned.
TTE/TD	P-3C Update III Aircraft Armament Maintenance Trainer Mock-ups
Prerequisite	° C-646-9571, P-3C Armament/Ordnance Systems Organizational Maintenance or have been in a P-3C Ordnance shop for six months ° Requirements of COMNAVAIRLANTINST 8023.5 series

Title ..... P-3 Flight Crew Ordnanceman

CIN R-050-6124

Model Manager.... Reserve ASW Training Center, Willow Grove

Description ..... This track provides the prospective P-3 Flight Crew Ordnanceman knowledge and skills in:

- ° Pre-flight Procedures
- ° Sonobuoy Loading
- ° Stray Voltage Checks
- ° Weapons Security Inspections
- ° Understanding of Weapons Checklists
- ° NATOPS Procedures
- ° Weapons Systems Operating Procedures

Upon completion, the student will be able to perform as a P-3 Flight Crew Ordnanceman in a squadron environment.

Length ..... 12 days

RFT date ..... Currently available

Skill identifier ..... AO 8271

TTE/TD ..... NA

Prerequisite ..... AO rating (Reservists only).

Title ..... Miniature Electronics Repair

CIN A-100-0072

Model Manager.... Fleet Training Center San Diego, California

Description ..... This track provides training to the AE or AT, including:

- ° Testing of Miniature Electronics
- ° Troubleshooting of Miniature Electronics
- ° Circuit Analysis of Miniature Electronics
- ° Fault Isolation of Miniature Electronics

Upon completion, the student will be able to perform intermediate level maintenance on miniature electronics in a shop environment under limited supervision.

Location ..... ° Fleet Training Center, Naval Station Mayport
° MTU 1083 NAMTRAU Whidbey Island

Length ..... 26 days

RFT date ..... Currently available

Skill identifier ..... ° AE 9527
° AT 9527

TTE/TD ..... Various miniature electronic circuit boards

Prerequisite ..... C-100-2017, Avionics Technician I Level Class A1

Title ..... Doppler Radar Equipment Intermediate Maintenance

CIN D-102-6036

Model Manager ... MTU 1011 NAMTRAU Jacksonville

Description ..... This track provides training to the AT, including:

° AN/APN-128A(V) Radar Navigation Set Testing
° AN/APN-128A(V) Radar Navigation Set Troubleshooting
° AN/APN-128A(V) Radar Navigation Set Repair

Upon completion, the student will be able to perform intermediate level maintenance on the AN/APN-128A(V) Radar Navigation Set in a shop environment under limited supervision.

Location ..... MTU 1011 NAMTRAU Jacksonville

Length ..... 33 days

RFT date ..... Currently available

Skill identifier ..... AT 6606

TTE/TD ..... Doppler Radar Navigation equipment

Prerequisites ..... ° C-100-2020, Avionics Common Core Class A1
° C-100-2017, Avionics Technician I Level Class A1

Title ..... Electronics Identification Equipment Intermediate Maintenance

CIN D/E-102-6039

Model Manager ... MTU 1011 NAMTRAU Jacksonville

Description ..... This track provides training to the AT, including:

- Troubleshooting and Repair of the AN/APX-100(V) Transponder Set
- Troubleshooting and Repair of the AN/APX-72 Radar Identification System
- Troubleshooting and Repair of the AN/APX-76 Air IFF Interrogation Set
- TS-1843/APX Transponder Test Set Operation

Upon completion, the student will be able to perform intermediate level maintenance on electronics identification systems in a shop environment under limited supervision.

Location .....
- MTU 1011 NAMTRAU Jacksonville
- MTU 1038 NAMTRAU Lemoore
- MTU 1007 NAMTRAU Oceana

Length ..... 65 days

RFT date ..... Currently available

Skill identifier ..... AT 6609

TTE/TD ..... Various Interrogator and Transponder Equipment

Prerequisites .....
- C-100-2020, Avionics Common Core Class A1
- C-100-2013, Avionics Technician Class A1

Title ..... AN/APS-115B Radar Systems Intermediate Maintenance

CIN D/E-102-6097

Model Manager ... MTU 1011 NAMTRAU Jacksonville

Description ..... This track provides training to the AT, including:

- AN/APS-115 Radar System Troubleshooting and Repair
- AN/ASA-66 Tactical Data Display Troubleshooting and Repair

Upon completion, the student will be able to perform intermediate level maintenance on the AN/APS-115B Radar and related systems in a shop environment under limited supervision.

Locations ..... ° MTU 1011 NAMTRAU Jacksonville
° MTU 1012 NAMTRAU Whidbey Island

Length ..... 44 days

RFT date ..... Currently available

Skill identifier ..... AT 6664

TTE/TD ..... AN/APS-115 Radar Systems

Prerequisite ..... C-100-2017, Avionics Technician I Level Class A1

Title ..... Radar Altimeter Equipment Intermediate Maintenance

CIN D/E-102-6109

Model Manager ... MTU 1036 NAMTRAU North Island

Description ..... This track provides training to the AT, including:

° AN/APN-171B(V) Radar Altimeter Troubleshooting and Repair
° AN/APN-194(V) Radar Altimeter Troubleshooting and Repair
° AN/APQ-107 Radar Altimeter Warning System Troubleshooting and Repair

Upon completion, the student will be able to perform intermediate level maintenance on radar altimeters and related systems in a shop environment under limited supervision.

Locations ..... ° MTU 1011 NAMTRAU Jacksonville
° MTU 1036 NAMTRAU North Island

Length ..... 30 days

RFT date ..... Currently available

Skill identifier ..... AT 6605

TTE/TD ..... Aircraft Radar Altimeter Equipment

Prerequisites ..... ° C-100-2020, Avionics Common Core Class A1
° C-100-2017, Avionics Technician I Level Class A1
° Confidential Security Clearance

Title ..... TACAN Radio Navigation Equipment Intermediate Maintenance

CIN D/E-102-6113

Model Manager ... MTU 1038 NAMTRAU Lemoore

Description ..... This track provides training to the AT, including:

- AN/ARN-84(V) TACAN System Troubleshooting and Repair
- AN/ARN-118(V) TACAN System Troubleshooting and Repair
- AN/AYK-14(V) Digital Data Computer Troubleshooting and Repair

Upon completion, the student will be able to perform intermediate level maintenance on TACAN systems and the AN/AYK-14(V) Digital Data Computer in a shop environment under limited supervision.

Locations ..... ° MTU 1038 NAMTRAU Lemoore
° MTU 1007 NAMTRAU Oceana

Length ..... 37 days

RFT date ..... Currently available

Skill identifier ..... AT 6612

TTE/TD ..... TACAN and Radio Navigation Equipment

Prerequisites ..... ° C-100-2020, Avionics Common Core Class A1
° C-100-2017, Avionics Technician I Level Class A1

Title ..... Infrared Detection System Intermediate Maintenance

CIN D/E-102-6121

Model Manager ... MTU 1011 NAMTRAU Jacksonville

Description ..... This track provides training to the AT, including:

- AN/AAS-36 Infrared Detection System Troubleshooting
- AN/AAM-60(V)2 Electro-Optical Systems Test Set Operation

Upon completion, the student will be able to perform intermediate level maintenance on IR detection systems in a shop environment under limited supervision.

Locations ..... ° MTU 1011 NAMTRAU Jacksonville
° MTU 1012 NAMTRAU Whidbey Island

Length ..... 93 days

RFT date ..... Currently available

Skill identifier ..... AT 6615

TTE/TD ..... Infrared Detection System

Prerequisite ..... C-100-2017, Avionics Technician I Level Class A1

Title ..... Cryptographic Equipment Intermediate Maintenance

CIN D/E-102-6122

Model Manager.... MTU 1007 NAMTRAU Oceana

Description ..... This track provides training to the AT, including:

- TSEC/KY-58 Secure Speech Set Troubleshooting and Repair
- TSEC/KI-1C Secure IFF Set Troubleshooting and Repair
- AN/USC-43(V) Airborne Narrow-Band Digital Voice Terminal Troubleshooting and Repair

Upon completion, the student will be able to perform intermediate level maintenance on Cryptographic Equipment in a shop environment under limited supervision.

Locations .....
- MTU 1007 NAMTRAU Oceana
- MTU 1038 NAMTRAU Lemoore

Length ..... 22 days

RFT date ..... Currently available

Skill identifier ..... AT 6634

TTE/TD ..... Aircraft Communication Security Devices and Related Equipment

Prerequisites .....
- C-100-2020, Avionics Common Core Class A1
- C-100-2017, Avionics Technician I Level Class A1
- Secret/Crypto Security clearance

Title	**UHF Communications Equipment Intermediate Maintenance**
CIN	D/E-102-6152
Model Manager ...	MTU 1007, NAMTRAU Oceana
Description	This track provides training to the AT, including: ° UHF Communications Equipment Fault Isolation and Circuit Analysis, applicable to the: - AN/ARC-159 Transceiver - AN/ARC-182 Communication Equipment - AN/ARC-210 Communication Equipment Upon completion, the student will be able to perform intermediate level maintenance on UHF communications equipment in a shop environment under limited supervision.
Locations	° MTU 1007 NAMTRAU Oceana ° MTU 1038 NAMTRAU Lemoore
Length	30 days
RFT date	Currently available
Skill identifier	AT 6611
TTE/TD	° Control Radio Set C-9451 ° Frequency Channel Indicator ID-1972 and ID-1984 ° Digital Converter
Prerequisite	C-100-2017, Avionics Technician I Level Class A1

Title ..... P-3 Peculiar Communications Equipment Intermediate Maintenance

CIN D/E-102-6171

Model Manager ... MTU 1011 NAMTRAU Jacksonville

Description ..... This track provides training to the AT, including troubleshooting and repair of:

- AN/ARC-143, AN/ARC-143A, and AN/ARC-143B, UHF Radio Receivers
- AN/ARC-161 Radio Set
- CU-2070/ARC Automatic Antenna Coupler
- AN/AIC-22(V) Intercommunication System

Upon completion, the student will be able to perform intermediate level maintenance on P-3 peculiar communication equipment in a shop environment under limited supervision.

Locations ..... ° MTU 1011 NAMTRAU Jacksonville
° MTU 1012 NAMTRAU Whidbey Island

Length ..... 51 days

RFT date ..... Currently available

Skill identifier ..... AT 6717

TTE/TD ..... P-3 Peculiar Communications Equipment

Prerequisite ..... C-100-2017, Avionics Technician I Level Class A1

Title ..... P-3 Peculiar Navigation Equipment Intermediate Maintenance

CIN D/E-102-6172

Model Manager ... MTU 1011 NAMTRAU Jacksonville

Description ..... This track provides training to the AT, including troubleshooting and repair of:

- AN/ARN-87 Navigation System
- AN/ARC-101 VHF Comm
- AN/ARN-151(V) Global Positioning Satellite Navigation
- 51V-4 Glide Slope Set

Upon completion, the student will be able to perform intermediate level maintenance on P-3 peculiar navigation equipment in a shop environment under limited supervision.

Locations ..... ° MTU 1011 NAMTRAU Jacksonville
° MTU 1012 NAMTRAU Whidbey Island

Length ..... 38 days

RFT date ..... Currently available

Skill identifier ..... AT 6710

TTE/TD ..... P-3 Peculiar Navigation Equipment

Prerequisite ..... C-100-2017, Avionics Technician I Level Class A1

Title ..... P-3 Magnetic Anomaly Detection (MAD) System Intermediate Maintenance

CIN D/E-130-9057

Model Manager ... MTU 1011 NAMTRAU Jacksonville

Description ..... This track provides training to the AT, including troubleshooting and circuit analysis of:

° AN/ASQ-81 MAD Set
° AN/ASA-71 Selector Control System
° AN/ASA-64A Submarine Anomaly Detector
° AN/ASA-65 Magnetic Compensator Group

Upon completion, the student will be able to perform intermediate level maintenance on P-3 MAD equipment in a shop environment under limited supervision.

Locations ..... ° MTU 1011 NAMTRAU Jacksonville
° MTU 1012 NAMTRAU Whidbey Island

Note: AN/ASQ-81 MAD has been removed from Training Track E-130-9057 taught at MTU 1012.

Length ..... 38 days

RFT date ..... Currently available

Skill identifier ..... AT 6526

TTE/TD ..... ° Reeling Machine Control 819730-1
° Reeling Machine 819781-1
° Reeling Machine Fixture 725532-1
° Electrical Mounting Bracket MIL-C-172

Prerequisite ..... C-100-2017, Avionics Technician I Level Class A1

Title ..... P-3 Aircraft Sonobuoy Receiving, Recording Reference System Intermediate Maintenance

CIN D/E-130-9072

Model Manager ... MTU 1011 NAMTRAU Jacksonville

Description ..... This track provides training to the AT, including troubleshooting and repair of:

° AN/AQH-4(V)2 Sound Recorder/Reproducer Set
° SG-791/ARR-72(V) Acoustic Sensor Signal Generator

Upon completion, the student will be able to perform intermediate level maintenance on sonobuoy receiving and recording systems in a shop environment under limited supervision.

Locations ..... ° MTU 1011 NAMTRAU Jacksonville
° MTU 1012 NAMTRAU Whidbey Island

Length ..... 31 days

RFT date ..... Currently available

Skill identifier ..... AT 6529

TTE/TD ..... Aircraft Sonobuoy Receiving, Recording Reference System

Prerequisite ..... C-100-2017, Avionics Technician I Level Class A1

Title ..... P-3 AN/USM-449A(V) Test Set Operator Intermediate Maintenance

CIN D-198-6007

Model Manager ... MTU 1011 NAMTRAU Jacksonville

Description ..... This track provides training to the AT, including:

° AN/USM-449(V) Test Set Operation

Upon completion, the student will be able operate the AN/USM-449(V) Test Set in a shop environment under limited supervision.

Location ..... MTU 1011 NAMTRAU Jacksonville

Length ..... 23 days

RFT date ..... Currently available

Skill identifier ..... AT 6716

TTE/TD ..... AN/USM-449(V) Automatic Test System

Prerequisite ..... C-100-2017, Avionics Technician I Level Class A1

Title ..... P-3 AN/USM-449A(V) Automatic Test System Maintenance Technician

CIN D-198-6009

Model Manager ... MTU 1011 NAMTRAU Jacksonville

Description ..... This track provides training to the AT, including troubleshooting and repair of:

° AN/USM-449(V) Test Set

Upon completion, the student will be able to maintain the AN/USM-449(V) Test Set in a shop environment under limited supervision.

Location ..... MTU 1011 NAMTRAU Jacksonville

Length ..... 100 days

RFT date ..... Currently available

Skill identifier ..... AT 6721

TTE/TD ..... AN/USM-449(V) Automatic Test System

Prerequisite ..... D-198-6007, P-3 Model Aircraft AN/USM-449(V) Test Set Operator Intermediate Maintenance

Title ..... T-56 Engine First Degree Intermediate Maintenance

CIN D/E-601-3001

Model Manager.... MTU 1011 NAMTRAU Jacksonville

Description ..... This track provides training to the AD, including the skills and knowledge required to perform first degree maintenance on:

° T-56 Turboprop Engine
° 54H60 Series Propeller

Upon completion, the student will be able to perform first-degree intermediate level maintenance on the T-56 Engine and related systems in a shop environment under direct supervision.

Locations ..... ° MTU 1011 NAMTRAU Jacksonville
° MTU 1012 NAMTRAU Whidbey Island

Length ..... 58 days

RFT date ..... Currently available

Skill identifier ..... AD 6418

TTE/TD ..... Refer to elements IV.A.1 and IV.A.2 for detailed information.

Prerequisites ..... ° C-601-2011, Aviation Machinist's Mate Common Core Class A1
° C-601-2013, Aviation Machinist's Mate Turboprop Fundamentals Strand Class A1

Title ..... Hydraulic Components Intermediate Maintenance

CIN D/E-602-4008

Model Manager.... MTU 1007 NAMTRAU Oceana

Description ..... This track provides training to the AM, including:

° Hydraulic Component Testing
° Hydraulic Component Troubleshooting
° Hydraulic Component Inspection
° Hydraulic Component Servicing
° Hydraulic Component Repair
° Hydraulic and Pneumatic Component Test Stand (HCT-10) Operation

Upon completion, the student will be able to perform intermediate level maintenance on hydraulic components in a shop environment under limited supervision.

Locations ..... ° MTU 1007 NAMTRAU Oceana
° MTU 1038 NAMTRAU Lemoore

Length ..... 23 days

RFT date ..... Currently available

Skill identifier ... AM 7212

TTE/TD ..... Various Aircraft Hydraulic Components

Prerequisite ..... C-603-0176, Aviation Structural Mechanic (Hydraulics and Structures) Strand Class A1

Title	**P-3 Automatic Flight Control System Intermediate Maintenance**
CIN	D/E-602-5032
Model Manager....	MTU 1012 NAMTRAU Whidbey Island
Description	This track provides training to the AE, including AN/ASW-31 AFCS: ° Testing ° Troubleshooting ° Circuit Analysis ° Fault Isolation ° Universal Avionics Component Test Set Upon completion, the student will be able to perform intermediate level maintenance on P-3 AFCS in a shop environment under limited supervision.
Locations	° MTU 1011 NAMTRAU Jacksonville ° MTU 1012 NAMTRAU Whidbey Island
Length	30 days
RFT date	Currently available
Skill identifier	AE 7136
TTE/TD	Automatic Flight Control Systems
Prerequisite	C-100-2017 Avionics Technician I Level Class A1

Title	**Aircraft Sealed Instrument Intermediate Repair**
CIN	D/E-602-5062
Model Manager....	MTU 1011 NAMTRAU Jacksonville
Description	This track provides training to the AE, including sealed instrument: ° Testing ° Troubleshooting ° Disassembly ° Alignment ° Operational Checks ° Circuit Analysis ° Fault Isolation ° Repair Upon completion, the student will be able to perform intermediate level maintenance on aircraft sealed instruments in a shop environment under limited supervision.
Locations	° MTU 1011 NAMTRAU Jacksonville ° MTU 3011 NAMTRAU Miramar
Length	44 days
RFT date	Currently available
Skill identifier	° AE 7137 ° AT 7137
TTE/TD	° Turbine Inlet Temperature Indicator BH183R58A ° Fuel Quantity Indicator 39003-05233 ° Attitude Indicator E25-8034 ° Bearing Indicator 104840
Prerequisite	C-100-2017, Avionics Technician I Level Class A1

Title	**Airframes Intermediate Maintenance**
CIN	D/E-603-4007
Model Manager....	MTU 1038 NAMTRAU Lemoore
Description	This track provides training to the AM, including: ° Introduction to Advanced Composite Material Repair ° Evaluation and Repair Criteria ° Repair Procedures and Processes Upon completion, the student will be able to perform intermediate level maintenance on advanced composite materials in a shop environment under limited supervision.
Locations	° MTU 1038 NAMTRAU Lemoore ° MTU 1039 NAMTRAU Oceana
Length	30 days
RFT date	Currently available
Skill identifier	AM 7232
TTE/TD	Various airframes components
Prerequisite	C-603-0176, Aviation Structural Mechanic (Hydraulics and Structures) Strand Class A1

Title	**Strike Armament Systems Intermediate Maintenance**
CIN	D/E-646-7001
Model Manager....	NAMTRAU North Island
Component Course.....	C-646-3118, Strike Armament Systems Intermediate Maintenance, 61 days
Description.....	This course currently provides training on F-14 aircraft armament systems; however it is being modified with P-3C unique data to provide knowledge and skills to the P-3C, Strike Intermediate Armament Maintenanceman including: ° Upon completion of this course, Aviation Ordnance Technicians will have sufficient knowledge/skills of aircraft armament equipment to include, ° Operational Checkout Procedures ° Corrosion Control ° Troubleshooting Procedures ° Periodic Maintenance Procedures ° Use of Special Tools and Test Equipment ° Use of Publications ° Use of Safety and Administrative Procedures Applicable to the P-3C Aircraft Armament Equipment Items Upon completion, the student will be able to perform as a Strike Intermediate Armament Maintenanceman for P-3C armament systems.
Location.....	° NAMTRAU North Island, 39476 ° NAMTRAU Norfolk, 44680
Length.....	65 days
RFT date	° F-14 Platform: Currently available ° P-3C Unique Strike Armament Systems: FY03
Skill identifier.....	6802
TTE/TD.....	Will be updated in the future as information becomes available.
Prerequisite	° C-646-2011, Aviation Ordnanceman A1 ° C-646-2012, Aviation Ordnanceman Navy Difference Training

(2) P-3C Aircraft Improvement Program. P-3C Update III and P-3C AIP Aircrew attend the same follow-on operator training tracks at VP-30. These P-3C courses have

been rewritten and include P-3C AIP information. No additional new operator courses or tracks are required.

P-3C Update III and P-3C AIP maintenance technicians attend the same organizational level training. Update III maintenance training is conducted at both MTU 1011 Jacksonville and MTU 1012 Whidbey Island; however AIP maintenance training is held only on the East coast at Patuxent River due to the lack of an AIP Integrated Avionics Trainer at either MTU.

One or more new P-3C AIP IATs is urgently required. Plans are in progress to build and install one at MTU 1011 NAMTRAU Jacksonville during the early part of FY03. This will be a new IAT and not a modification of the existing Update III IAT. Plans for a second IAT at MTU 1012 Whidbey Island are pending.

Title	**P-3C Aircraft Improvement Program (AIP) Weapons System Organizational Maintenance**
CIN	D-102-6719
Model Manager ...	MTU 1011 NAMTRAU Jacksonville
Component Course.....	C-102-3600, P-3 Aircraft Improvement Program Organizational Maintenance Course OATMS: 33 days, NTMPS/CANTRAC: 38 days
Description	This track provides training to the first or second tour AT, including: ° AIP Data Processing/Display Control System ° AIP Tactical Navigation Communication System ° AIP Integrated Sensor Systems ° AIP Weapons System ° AIP Countermeasures System Upon completion, the student will be able to perform organizational maintenance on the P-3C AIP Aircraft avionics systems in a squadron environment under limited supervision.
Location	Training is currently conducted at NAS Patuxent River. Instructors are from MTU 1011 NAMTRAU Jacksonville.
Length	37 days
RFT date	June 2001

Skill identifier ..... AT 6719

This NEC, P-3C AIP Weapon System Technician (WST), requirement has been determined to be under-represented in squadron manpower documents and the number of billets is expected to increase and may ultimately be equivalent to the current number of AT-8319 billets.

TTE/TD ..... P-3C AIP Aircraft Weapon Systems Maintenance Trainer Mock-ups

Note: One or more P-3C AIP IAT is urgently required.

Prerequisite ..... D/E-102-1132, P-3C Weapon Systems Initial Organizational Maintenance (see Note).

Note: The de facto requirement has been for the candidate to be a graduate of *D/E-102-1029, P-3C Initial Organizational Maintenance* (AT 8819) in order to satisfy fleet needs. CANTRAC still reflects that the candidate be a P-3C Update III Weapons System Technician (AT-8319); however, since the "Initial" course has been strengthened, this is no longer required.

(3) P-3C Block Modification Upgrade Program. Follow-on training for operator and maintenance personnel will be developed in CBT format and will be conducted at WILCs and NAMTRAUs. When more detailed information becomes available it will be included in updates to this NTSP.

(4) P-3C Counter Drug Upgrade. Formal aircrew training courses will not be developed for the CDU program. The numbered Wings provide aircrew training for the AN/APG-66 and AN/AVX-1(V)1. Follow-on training for maintenance personnel has been developed in CBT format and is conducted in the WILCs. Operator training and discrete component organizational level maintenance training will be provided by NATEC.

e. Selected Reserve Training

(1) P-3C Update III. For Selected Reserve (SELRES) personnel to be awarded an NEC, each person's current skills, knowledge, and previous training are evaluated on an individual basis by the Commander, Naval Air Reserve Force and the MTU. In some cases, additional training is required.

Most NECs are potentially awardable to SELRES personnel. However, given an individual's training experience, it is not always feasible for SELRES personnel to be awarded an NEC that entails a long training period. Normally, a SELRES billet for a particular NEC that requires a long training period is filled by personnel who were awarded that NEC while on active duty or are willing to attend the required courses, given that a quota and funding are available.

VP-62 at NAS Jacksonville completed P-3C Update III Aircraft transition training in March 1990. VP-91 at NAS Moffett Field began P-3C Update III Aircraft transition training in March 1990 and has completed transition training. VP-69 began P-3C Update III Aircraft transition training in April 1996 and has completed the transition. Two Training and Administration of Naval Reserve (TAR) personnel from each affected category were trained at VP-30 and MTU 1011 to achieve required skills and prepare to instruct the same material. This cadre of instructors has worked with civilian contractor personnel to develop the P-3C Update III training for the balance of VP-62. This tailored training was based on VP-30 and MTU 1011 curricula and is being taught in a modular form during drill and active duty periods by both VP-62 and contractor instructors. Students with related NECs applicable to the P-3C Aircraft are eligible for the appropriate P-3C Update III NEC designation upon completion. It also served as the basis for subsequent transition of other Reserve Squadrons to the P-3C Update III Aircraft.

(2) P-3C Aircraft Improvement Program. The P-3C AIP Aircraft will be operated or maintained by SELRES personnel once they are delivered. The first two are scheduled to be delivered to VP-62 in July and September 2002.

(3) P-3C Block Modification Upgrade Program. P-3C BMUP SELRES training is under development. Formal maintenance training courses will not be developed for the BMUP program; instead, a mix of ICW and CAI products for both aircrew and maintenance training will be available at the WILCs or provided as needed by NATEC representatives. The ICW was delivered in March 2002 and the CAI will be delivered in October 2002. These products will be used to develop a syllabus for a Fleet Introduction Team that will provide squadron training.

(4) P-3C Counter Drug Upgrade. P-3C CDU SELRES syllabus training is the same as Active Duty training.

f. Student Profiles. The following student profiles are applicable to the Update III, AIP, BMUP, and CDU configurations of the P-3C Aircraft:

SKILL IDENTIFIER	PREREQUISITE SKILL AND KNOWLEDGE REQUIREMENTS
1311	o Q-2A-0010, Joint T-34C Intermediate Flight Training
1312	o Q-2A-0010, Joint T-34C Intermediate Flight Training
1321	o Q-2D-0012, Basic Naval Flight Officer Training
1322	o Q-2D-0012, Basic Naval Flight Officer Training
AD 6418, 8819	o C-601-2011, Aviation Machinist's Mate Common Core Class A1 o C-601-2013, Aviation Machinist's Mate Turboprop Fundamentals Strand Class A1

SKILL IDENTIFIER	PREREQUISITE SKILL AND KNOWLEDGE REQUIREMENTS
AD 8251	o D-2D-0039, Survival Evasion Resistance and Escape o D-050-1202, P-3 Replacement Flight Engineer – Preparation Course o Q-050-1500, Naval Aircrewman Candidate School
AD 8319	o C-601-2011, Aviation Machinist's Mate Common Core Class A1 o C-601-2013, Aviation Machinist's Mate Turboprop Fundamentals Strand Class A1 o D/E-601-1011, P-3 Power Plants and Related Systems Initial Organizational Maintenance
AE 7136, 7137, 9527	o C-100-2020, Avionics Common Core Class A1 o C-602-2039, Aviation Electrician's Mate O Level Strand Class A1
AE 8251	o D-2D-0039, Survival Evasion Resistance and Escape o D-050-1202, P-3 Replacement Flight Engineer – Preparation Course o Q-050-1500, Naval Aircrewman Candidate School
AE 8319	o C-100-2020, Avionics Common Core Class A1 o C-602-2039, Aviation Electrician's Mate O Level Strand Class A1 o D/E-602-1054, P-3 Electrical and Instrument Systems Initial Organizational Maintenance
AE 8819	o C-100-2020, Avionics Common Core Class A1 o C-602-2039, Aviation Electrician's Mate O level Strand Class A1
AM 7212, 7213, 7232, 8819	o C-603-0175, Aviation Structural Mechanic (Hydraulics and Structures) Common Core Class A1 o C-603-0176, Aviation Structural Mechanic (Hydraulics and Structures) Strand Class A1
AM 8251	o D-2D-0039, Survival Evasion Resistance and Escape o D-050-1202, P-3 Replacement Flight Engineer – Preparation Course o Q-050-1500, Naval Aircrewman Candidate School
AM 8319	o C-603-0175, Aviation Structural Mechanic (Hydraulics and Structures) Common Core Class A1 o C-603-0176, Aviation Structural Mechanic (Hydraulics and Structures) Strand Class A1 o D/E-602-1081, P-3 Airframe and Hydraulic Systems Initial Organizational Maintenance
AME 8251	o D-2D-0039, Survival Evasion Resistance and Escape o D-050-1202, P-3 Replacement Flight Engineer – Preparation Course o Q-050-1500, Naval Aircrewman Candidate School

SKILL IDENTIFIER	PREREQUISITE SKILL AND KNOWLEDGE REQUIREMENTS
AME 8319	o C-602-2033, Aviation Structural Mechanic E (Safety Equipment) Common Core Class A1 o C-602-2034, Aviation Structural Mechanic E (Safety Equipment) Egress Strand Class A1
AO 6802	o D/E-646-7001, Strike Armament Systems Intermediate Maintenance o C-646-3118, Strike Armament Equipment Intermediate Maintenance Repair
AO 8251	o D-2D-0039, Survival Evasion Resistance and Escape o D-050-1202, P-3 Replacement Flight Engineer – Preparation Course o Q-050-1500, Naval Aircrewman Candidate School
AO 8319	o C-646-2011, Aviation Ordnanceman Common Core Class A1 o C-646-2012, Aviation Ordnanceman Airwing Strand Class A1
AT 6526, 6529, 6534, 6605, 6606, 6609, 6611, 6612, 6613, 6615, 6634, 6664, 6710, 6716, 6717, 6721, 7137, 9526, 9527	o C-100-2020, Avionics Common Core Class A1 o C-100-2017, Avionics Technician I Level Class A1
AT 6719	o C-100-2020, Avionics Common Core Class A1 o C-100-2018, Avionics Technician O Level Class A1 o D/E-102-1029, P-3C Initial Weapon Systems Organizational Maintenance
AT 8251	o D-2D-0039, Survival Evasion Resistance and Escape o D-050-1202, P-3 Replacement Flight Engineer – Preparation Course o Q-050-1500, Naval Aircrewman Candidate School
AT 8262, 9402	o C-100-2020, Avionics Common Core Class A1 o C-100-2018, Avionics Technician O Level Class A1 o D/E-102-1132, P-3C Career Weapon System Organizational Maintenance o Q-050-1500, Naval Aircrewman Candidate School o D/E-102-1029, P-3C Initial Weapon Systems Organizational Maintenance o D-050-1131, VP-30 IFT Category I (awards 8262) o D-050-1143, VP-30 IFT Category II (awards 9402) o D-050-1149, VP-30 IFT Category III (refresher, 9402 prerequisite)
AT 8319	o C-100-2020, Avionics Common Core Class A1 o C-100-2018, Avionics Technician O Level Class A1 o D/E-102-1029, P-3C Initial Weapon Systems Organizational Maintenance
AT 8819	o C-100-2020, Avionics Common Core Class A1 o C-100-2018, Avionics Technician O Level Class A1

SKILL IDENTIFIER	PREREQUISITE SKILL AND KNOWLEDGE REQUIREMENTS
AW 7841, 7861	o C-210-2010, Aviation Warfare Systems Operator Class A1 o Q-050-1500, Naval Aircrewman Candidate School

g. Training Pipelines. All P-3C training tracks and pipelines found in the Catalog of Navy Training Courses (CANTRAC), Navy Training Management and Planning System (NTMPS), and OPNAV Aviation Training Management System (OATMS) need to be reviewed for currency. In many cases, course titles, descriptions, course lengths, etc., do not agree. In general, course length data for this NTSP was derived from OATMS data. Individual discrepancies between course length data for separate courses was annotated when possible in the course descriptions provided.

I. ONBOARD (IN-SERVICE) TRAINING. The information contained in this paragraph is applicable to the Update III, AIP, BMUP, and CDU configurations of the P-3C Aircraft.

1. Proficiency or Other Training Organic to the New Development

a. Maintenance Training Improvement Program. Current planning is to adopt the Aviation Maintenance Training Continuum System (AMTCS) concepts to replace the Maintenance Training Improvement Program (MTIP). AMTCS is scheduled to begin full implementation for fleet deployment in FY03.

b. Aviation Maintenance Training Continuum System. AMTCS will provide career path training to the Sailor or Marine from their initial service entry to the end of their military career. AMTCS concepts will provide an integrated system that will satisfy the training and administrative requirements of both the individual and the organization. The benefits will be manifested in the increased effectiveness of the technicians and the increased efficiencies of the management of the training business process. Where appropriate, capitalizing on technological advances and integrating systems and processes can provide the right amount of training at the right time, thus meeting the CNO's mandated "just-in-time" training approach.

Technology investments enable the development of several state-of-the-art training and administrative tools: Interactive Multimedia Instruction (IMI) for the technicians in the Fleet in the form of ICW with Computer Managed Instruction (CMI) and instructor-led CAI for the schoolhouse.

Included in the AMTCS development effort is the Aviation Maintenance Training Continuum System - Software Module, which provides testing [Test and Evaluation], recording [Electronic Certification Qualification Records], and a Feedback system. The core functionality of these AMTCS tools are based and designed around the actual maintenance-related tasks the technicians perform, and the tasks are stored and maintained in a Master Task List data bank. These tools are to be procured and fielded with appropriate COTS hardware and software, i.e.,

Fleet Training Devices - Laptops, PCs, Electronic Classrooms, Learning Resource Centers (LRC), operating software, and network software and hardware.

Upon receipt of direction from OPNAV (N789H), AMTCS concepts are to be implemented and the new tools integrated into the daily training environment of all participating aviation activities and supporting elements. AMTCS will serve as the standard training system for aviation maintenance training within the Navy and is planned to supersede the existing MTIP programs. For more information on AMTCS, contact PMA205.

2. Personnel Qualification Standards. The following PQS table will be updated, as required, with information provided by VP-30 to the Personnel Qualification Standards Development Group, Naval Education and Training Professional Development and Technology Center, Pensacola, Florida.

TITLE	NUMBER
P-3C/C(U) Patrol Plane Commander/Instructor Pilot	43433-10C
P-3C Observer/Safety of Flight Radar Operator/Hand Held Camera Operator	43433-11B
P-3 Flight Engineer/Instructor	43433-13B
P-3C/C(U) I-III Non acoustic Sensor Operator	43433-15B
P-3C/C(U) Acoustic Sensor Operator	43433-16C
P-3C/C(U) Aircraft Aircrew In-Flight Technician	43433-18B
P-3C/C(U) Aircraft Armament/Ordnance Crewmember	43433-19B
P-3 Aircraft Ground Operator	43433-1B
P-3C/C(U) Navigator-Communicator/Tactical Coordinator/Instructor	43433-21C
P-3C/C(U) Aircraft Acoustic Sensor Operator	43433-25
P-3 Ground Engine Turn Operator	43433-26A
P-3C Aircraft Improvement Program Patrol Plane Commander	43433-27
P-3C Aircraft Improvement Program Navigator Communicator/Tactical Coordinator (NAVCOM/TACCO)	43433-29
P-3C Aircraft Improvement Program Non-Acoustic Sensor Operator	43433-30
P-3C Aircraft Improvement Program AVX-1 Electro Optical System Operator	43433-31
P-3C Aircraft Improvement Program In-Flight Technician	43433-32

3. Other Onboard or In-Service Training Packages. Other onboard training consists of Practical Job Training, On-the-Job Training, and individual progress toward aircrew designation. The following devices were developed to provide post-FRS proficiency and readiness training located at Patrol Wing (PATWING) 5, NAS Brunswick; PATWING 11, NAS

Jacksonville; PATWING 10, NAS Whidbey Island; and Patrol Wings Pacific, MCB Kaneohe Bay.

a. Wing Interactive Learning Centers. The WILCs are controlled by the local Wing Fleet Training Officer and are located at

- NAS Jacksonville..... Wing 11
- NAS Brunswick ..... Wing 5
- NAS Whidbey Island .... Wing 10
- MCB Kaneohe Bay ..... COMPATRECONFORPAC (formerly Wing 2)

The purpose of the WILC is to provide P-3C AIP aircrew with ground training with a highly visual, full spectrum, cause-and-effect training delivery method to reduce the difficulty of learning complicated, rapidly deployed systems. Making the relationships visual, dynamic, and clear reduces time to train while substantially increasing concept level understanding. WILCs are a multi-use concept display training aid using COTS hardware and software to the maximum extent. A typical WILC may provide ten user workstations connected to a file server. The major training system objectives supported by WILC are:

- To provide analysis training by graphically displaying and simulating automated internal and external tactical information and producing the corresponding aural and visual queues simultaneously, including changes to the systems operating parameters in a dynamic scenario
- To provide theory training using variables, including corresponding threat environments that can be changed during classroom instruction
- To provide support for the introduction of concepts and theories exploited in new designs
- To provide theory of operation, troubleshooting, demonstration of repair, and remove and replace procedures

P-3C AIP aircrew CBT training products are developed under contract for PMA205 and forwarded to the Fleet Training Officer at VP-30 from whence they are distributed to the WILCs. It is important for Fleet Training Managers to be aware of training resources available to them. A list of available P-3 AIP and other CBT products is available in CPRFL (N71) Naval Message R 091604Z Oct 01. Contact information for Wing Training Officers is listed in Part VII of this NTSP.

b. Deployable Acoustic Readiness Trainer. The Deployable Acoustic Readiness Trainer is an onboard tape replay system used with the aircraft's acoustic system for acoustic operator proficiency training.

c. Device 2F140 - Tactical Operational Readiness Trainer. TORT is used at all home sites for readiness and crew coordination training.

d. Device 2F87(F) - Operational Flight Trainer. The OFT is used at all home sites for flight proficiency training, emergency procedures training, instrument flight checks, and flight station crew coordination training.

J. LOGISTICS SUPPORT

1. Manufacturers and Contract Numbers

a. P-3C Update III

CONTRACT NUMBER	SYSTEM OR COMPONENTS	MANUFACTURER	ADDRESS
N00019-85-C-0218	ATSG	Rospatch Corporation	7500 Main Street P.O. Box 750 Fishers, NY 14445
N00019-85-C-0437	MLU	General Electric Co.	French Road Utica, NY 13505
N00019-86-C-0086	P-3C Airframe Systems	Lockheed Aeronautical Systems Co.	P.O. Box 551 Burbank, CA 91520
N00019-86-C-0192	CP-2044	LMTDS Computer Systems Division	Unisys Park P.O. Box 64525 St. Paul, MN 55164
N00019-86-C-0256	ASCL and ACPA	Hazeltine Corporation	Pulaski Road Greenlawn, NY 11740
N00019-87-C-0151	AQH-4	Honeywell, Inc.	4800 East Dry Creek Road Littleton, CO 80120
N00019-88-C-0216	DMTS	Fairchild Reston Systems, Inc.	P.O. Box 3041 Sarasota, FL 34230
N00019-91-C-0068	AN/USQ-78	Loral Corporation	P.O. Box 64525 St. Paul, MN 55164
N00024-86-C-5212	SASP AU, DCU, MPD, and CMEP	Loral Defense Systems	9500 Godwin Drive Manassas, VA 22110

b. P-3C Aircraft Improvement Program. There are several manufacturers contracted under N00019-97 C-0156 to produce the various systems and components for the P-3C AIP. For specific information, contact PMA290.

CONTRACT NUMBER	SYSTEM OR COMPONENTS	MANUFACTURER	ADDRESS
N00019-95-C-0198 N00383-98-G-006J	AN/APS-137 Radar	Raytheon Systems Company McKinney, Texas	Raytheon Company 141 Spring Street Lexington, MA 02421
N00019-97-C-0025	TACT	L3 Communications, Link Simulation and Training	P.O. Box 5328 Arlington, TX 76005-5328

c. P-3C Block Modification Upgrade Program. The P-3C BMUP contract was awarded in June 1998 and will be implemented by a strategy which includes the retrofit of existing P-3C Update II and II.5 Aircraft. A total of 25 P-3C Aircraft are scheduled for modification to the BMUP configuration with eight going to the Reserve Wing and the remainder to the active fleet. Additional information will be provided in future updates to this NTSP.

d. P-3C Counter Drug Upgrade. The AN/AVX-1 and AN/APG-66 are Government Furnished Equipment (GFE). For additional information, contact PMA290.

2. Program Documentation

a. P-3C Update III. The P-3C Update III Aircraft has been in service since the early 1980s. Although no ILSP was developed for the P-3C Update III Aircraft, ILSPs were developed for each of the P-3C basic systems. These ILSPs were not changed by the incorporation of the Update III and CHEX peculiar equipment such as the SASP, ASCL, ACPA, and ATSG. For more information regarding ILSPs peculiar to a particular system, contact PMA290.

b. P-3C Aircraft Improvement Program. The P-3C AIP Aircraft ILSP, AV-ILSP-30A-270, was approved in May 1994.

c. P-3C Block Modification Upgrade Program. The P-3C BMUP ILSP is under development.

d. P-3C Counter Drug Upgrade. Content matter for the P-3C CDU ILSP has been incorporated into the P-3C AIP Aircraft ILSP.

3. Technical Data Plan

a. P-3C Update III. All P-3C Update III baseline technical data manuals and publications required to support operation and maintenance have been delivered for fleet use. Refer to element IV.B.3 for a complete list of technical manuals used in training.

b. P-3C Aircraft Improvement Program. P-3C AIP baseline technical manuals and publications have been delivered. AIMS, SEI, and ELCID manuals will be delivered as the systems mature and they become available. Included but not listed in Part IV is:

- NA-01-75PAI-2-15.1 Integrated SS 1&2 wiring Data for NAVY Model P-3C AIP Aircraft

c. P-3C Block Modification Upgrade Program. P-3C BMUP technical data manuals and publications required to support operation and maintenance will be delivered concurrent with aircraft delivery. Included but not listed in Part IV are:

- NA-01-75PAC-12-12 STP for CP-2451/ASQ-227
- NA-01-75PAC-2-15.1 Integrated SS 1&2 Update III and BMUP wiring Data

d. P-3C Counter Drug Upgrade. P-3C CDU technical manuals and publications required to support operation and maintenance have been developed and distributed to fleet units.

4. Test Sets, Tools, and Test Equipment

a. P-3C Update III. The AN/USM-449 Universal Avionics Tester is unique to the P-3 community and is being used at the intermediate and depot levels to check and test P-3C Update III Aircraft avionics.

b. P-3C Aircraft Improvement Program. BIT Equipment is used for testing P-3C AIP unique systems.

c. P-3C Block Modification Upgrade Program. Information on the P-3C BMUP Aircraft specific test set, tools, and test equipment requirements will be included in updates to this NTSP.

d. P-3C Counter Drug Upgrade. Information on the P-3C CDU Aircraft specific test set, tools, and test equipment requirements have been identified and supplied to fleet units.

5. Repair Parts. Generally, repair parts for all P-3 type/model/series are being supplied as part of either the interim support Repair of Repairables effort or by the Naval Inventory Control Point.

a. P-3C Update III. Repair parts and services are being procured as part of the equipment acquisition contracts and in accordance with the ILSP for the equipment concerned. The MSD for the P-3C Update III was 1986.

b. P-3C Aircraft Improvement Program. Spares, repair parts, and services are being procured as part of the equipment acquisition contract for P-3C AIP in accordance with the ILSP. A MSD has not been established.

c. P-3C Block Modification Upgrade Program. Repair parts and services will be procured as part of the equipment acquisition contracts and in accordance with the ILSP for the equipment concerned. This information will be included in future updates to this NTSP when it becomes available. A MSD has not been established.

d. P-3C Counter Drug Upgrade. Spares, repair parts, and services have been procured as part of the equipment acquisition contracts and in accordance with the ILSP for the equipment concerned.

6. Human Systems Integration. Modern equipment design practices are used wherever possible in new equipment manufacture to ensure the best possible product for the warfighter. The Human Systems Integration (HSI) Plan establishes the basis for effective integration of human factors engineering, manpower, personnel, training, health hazards, and safety considerations into the P-3C acquisition as outlined in Department of Defense Instruction 5000.2R.

K. SCHEDULES

1. Installation and Delivery Schedules

a. P-3C Update III. Delivery of P-3C Update III Aircraft has been completed.

b. P-3C Aircraft Improvement Program. P-3C AIP Aircraft are retrofit P-3C Update III Aircraft. The first production P-3C AIP Aircraft was delivered to VP-30 on 29 April 1998; the fleet began receiving aircraft immediately thereafter. There are currently 50 AIP aircraft delivered with plans for a total of 68 P-3C AIP Aircraft currently supported in the budget. Due to frequent schedule changes, an installation schedule is not provided here. For current installation and delivery schedule information, contact PMA290D3.

c. P-3C Block Modification Upgrade Program. The BMUP will modify 25 P-3C Update II.5 Aircraft, with four BMUP aircraft having been delivered to date (in addition to one being used for OT); aircraft deliveries began in December 2001. Due to frequent schedule changes, an installation schedule is not provided here. For current installation schedule information, contact PMA290D2.

d. P-3C Counter Drug Upgrade. Delivery of the P-3C CDU Aircraft began in 1998. Eighteen existing P-3C Update II, II.5, and III Aircraft were modified. Delivery of P-3C CDU Aircraft is complete.

2. Ready For Operational Use Schedule

a. P-3C Update III. The P-3C Update III Aircraft is ready for operational use upon delivery and completion of an acceptance inspection.

b. P-3C Aircraft Improvement Program. The P-3C AIP Aircraft is ready for operational use upon delivery and completion of an acceptance inspection.

c. P-3C Block Modification Upgrade Program. The P-3C BMUP Aircraft will be ready for operational use upon delivery and completion of an acceptance inspection.

d. P-3C Counter Drug Upgrade. The P-3C CDU Aircraft is ready for operational use upon delivery and completion of an acceptance inspection.

3. Time Required to Install at Operational Sites. NA

4. Foreign Military Sales and Other Source Delivery Schedule. The P-3 FMS program provides products and services to other U.S. military services and foreign countries according to contractual agreement in the form of aircraft, spare parts, and/or training for both aircrew and maintenance personnel. The P-3C is owned and operated by the military of several countries, including the Royal Australian Air Force (RAAF), Canadian Forces (CF), Royal Netherlands Navy (RNLN), and others. For more information, contact PMA290.

5. Training Device and Technical Training Equipment Delivery Schedule

a. P-3C Update III. TDs used in support of P-3C Update III Aircraft generally have evolved with the P-3C Program. Technical Training Equipment (TTE) is integrated into the individual TDs.

(1) Global Positioning System and Communications Improvement Program. The IAT, TORT 2F140, and OFT 2F87(F) have been modified with the GPS and CIP. All deliveries have been completed.

(2) Replacement Data Storage System. The RDSS is a modern, high speed, high capacity replacement for the AN/ASH-33 DMTS. The RDSS will be retrofit into all aircraft currently having the AN/ASH-33. Operator and maintenance TDs with the AN/ASH-33 will be modified with the RDSS. The schedule is currently not available, but will be included in updates to this NTSP.

(3) Replacement Inertial Navigation Unit. The RINU program will begin TD modifications in FY02. Modifications will be made to the IATs, the OFT 2F87(F)s, and the TORT 2F140s.

(4) Device 2F140 Service Life Extension Program. The 2F140 SLEP is designed to extend the useable life of the TORT 2F140 TDs well into the twenty-first century. The SLEP will replace the Lexidata displays with full color Red-Green-Blue monitors, rewrite command and control display software into a true X-windows environment, replace the obsolete

I-O system, and provide for overall refurbishment of the device. Funding is identified for program initiation in FY02. Preliminary work (specification development and competition) began in FY01.

(5) Electronic Flight Display System. Due to the small number of aircraft currently projected to receive the EFDS modification, only one OFT 2F87(F) at NAS Jacksonville is scheduled to receive the EFDS modification. Funds are identified for TD modification in FY01. A stand-alone bench TD will be developed for maintenance training at NAS Jacksonville and NAS Whidbey Island. When more information becomes available it will be included in updated to this NTSP.

(6) Visual System. The Visual System Program will replace the visual system displays of all six OFT 2F87(F) and both OFT 2F142(F) in the P-3 community. The program started in FY01 with specification development, competition package preparation, and contract award planned during FY02. The first system will be Ready For Training (RFT) 24 to 30 months after contract award with subsequent RFT dates falling 18 months after option line-item exercise. The new visual systems will include day and night scenes, increased field of view, and greater reliability and maintainability.

(7) Training Device Transfers. There are three TDs being transferred to the Reserve fleet. APTT 14B53A-Unit 1 has been transferred from NAS Barbers Point to NAS Willow Grove and was RFT in September 1999. OFT 2F87(T) Unit 6 was RFT at Naval Station (NS) Point Mugu in November 1999. APTT 14B53A Unit 3 was transferred to the Naval Reserves in FY00.

b. P-3C AIP Aircraft

(1) P-3C AIP Integrated Avionics Trainer. In order to effectively and efficiently provide quality instruction to ground and aircrew avionics maintenance personnel on P-3C AIP specific systems, one or more AIP Integrated Maintenance Trainers is urgently required. Like the Update III IAT, it is expected that the AIP IAT will consist of a mockup of a P-3C aircraft interior with avionics bays and equipment racks populated with applicable electronics equipment, wiring interfaces, cooling systems, and operator workstations allowing for highly effective training to be conducted in realistic and safe surroundings.

Current plans are to install one at MTU 1011 NAMTRAU Jacksonville during FY03. This will be a new IAT and not a modification of the existing Update III IAT. For more information, contact the program manager, PMA205.

(2) Tactical Aircrew Coordination Trainer. The 2F179 TACT is a COTS/NDI P-3C TD used to provide crew coordination and systems operations training to the five P-3C aircrew operators responsible for performing the P-3C AIP mission. Acquisition of the TDs is through a Firm Fixed Priced (FFP) contract, number N00019-97-C-0025, with L-3 Communications, Link Simulation and Training, Arlington, Texas. Trainer Configuration for the first device is based on P-3C AIP Aircraft No. 7, with the only modification being the addition of a simulated AN/ASX-4 AIMS system. The second and subsequent devices will have an upgraded OASIS, Tactical Mission Software, Silicon Graphics, Inc. 5th Generation 64-Bit UNIX

Operating System (IRIX 6.5), and ELCID designed in when delivered to the respective sites. Retrofit of the first device with these modifications will occur after the RFT dates of the second and third devices. A fourth TACT is scheduled to be RFT by April of 2004 and a fifth, high priority (yet currently unfunded), TACT is scheduled for VP-30 to train FRS students.

The 2F179 TACT provides coordinated training in operating the communications, non-acoustic, survivability and vulnerability, data processing, display and control, and armament equipment in the P-3C AIP Aircraft. A central computer with multi-tasking, multi-processing capability serves the TACT interactively between the individual operator stations, and between the instructor stations and the operator stations. The 2F179 TACT displays and controls replicate the aircraft systems displays and controls functionality.

TRAINING DEVICE	UNIT NO.	LOCATION	RFT DATE
2F179 TACT	1	NAS Jacksonville	Mar 00
2F179 TACT	2	NAS Whidbey Island	Feb 02
2F179 TACT	3	NAS Brunswick	Apr 02
2F179 TACT	4	MCB Kaneohe Bay	Apr 04
2F179 TACT	5	NAS Jacksonville	TBD

c. P-3C Block Modification Upgrade Program. TDs to support the BMUP have not been identified at this time; however, this information will be included in future updates to this NTSP.

d. P-3C Counter Drug Upgrade. Procurement of new and modification of existing TDs is not planned at this time.

L. GOVERNMENT-FURNISHED EQUIPMENT AND CONTRACTOR-FURNISHED EQUIPMENT TRAINING REQUIREMENTS. This section will be updated as information becomes available.

M. RELATED NTSPs AND OTHER APPLICABLE DOCUMENTS

DOCUMENT OR NTSP TITLE	DOCUMENT OR NTSP NUMBER	PDA CODE	STATUS
A/R/UGM-84D/F Harpoon Air Launched Missile System NTSP	N88-NTSP-A-50-8211B/A	PMA258	Approved Jun 96

DOCUMENT OR NTSP TITLE	DOCUMENT OR NTSP NUMBER	PDA CODE	STATUS
AGM-65F Infrared Maverick Missile NTSP	N88-NTSP-A-50-8501B/A	PMA242	Approved Apr 99
AGM-84E Standoff Land Attack Missile NTSP	N88-NTSP-A-50-8813B/A	PMA258	Approved May 96
AGM-84H Standoff Land Attack Missile Expanded Response NTSP	N88-NTSP-A-50-9502A/A	PMA258	Approved Nov 2000
AGM-84 H/K Standoff Land Attack Missile Expanded Response Automatic Target Acquisition NTSP	N78-NTSP-A-50-9503B/D	PMA258	Draft Jun 2002
VP Training Roadmap for the AGM-84H/K Standoff Land Attack Missile Expanded Response	Weapons Tactics Unit (WTU) Draft Revision 4	VP-30 WTU	Draft Jul 2002
Aircraft Survivability Equipment (ASE) NTSP	A-50-8302C/A	PMA272	Approved Dec 94
AN/ALE-47 Countermeasures Dispensing System NTSP	N88-NTSP-A-50-9001B/P	PMA272	Proposed Jun 02
AN/ALR-66(V)2 and (V)3 NTSP	A-50-8711/A	PMA240	Approved Dec 88
AN/ARC-182(V) Radio Set NTSP	N88-NTSP-A-50-8115D/A	PMA209	Approved Mar 00
AN/ARC-210(V) Integrated Logistics Support Plan	AV-ILSP-322	PMA209	Approved May 95
AN/ARN-118(V) Tactical Air Navigation (TACAN) System NTSP	A-50-8307B/A	AIR-533	Approved Sep 94
Consolidated Rocket Systems NTSP	N88-NTSP-A-50-9801/A	PMA242	Approved Aug 00
EA-6B ICAP II NTSP	N88-A-50-7904D/A	PMA234	Approved Mar 01

DOCUMENT OR NTSP TITLE	DOCUMENT OR NTSP NUMBER	PDA CODE	STATUS
EP-3E Airborne Reconnaissance Integrated Electronics Suite (ARIES) II Sensor System Improvement Program (SSIP) Aircraft NTSP	N88-NTSP-A-50-8605D/A	PMA290	Approved Mar 01
Maintenance Plan for TS-3895A/UV ANVIS Test Set	MP-AVSE-MAPL-067 Rev A	NSWC Crane 8052	Approved Nov 94
Navy Consolidated Sonobuoys NTSP	N88-A-50-8910C/A	PMA264	Approved Aug 00
Operational Logistics Support Plan for AN/AVS-6(V) ANVIS	AV-192 Rev B	PMA202, AIR-3.1	Approved Apr 86
P-3 Weapon System Acquisition Plan	AIRNOTE C13100, AIR 10042B, Ser C1087	PMA240	Completed Jul 87
P-3C AIP Aircraft Improvement Program ILSP	AV-ILSP-30A-270	AIR-4102M3	Approved May 94

PART II - BILLET AND PERSONNEL REQUIREMENTS

The following elements are not affected by the P-3C Series Aircraft and, therefore, are not included in Part II of this NTSP:

II.A. Billet Requirements

II.A.2.a. Operational and Fleet Support Activity Deactivation Schedule

Note: No activity deactivation scheduling information is available at this time.

PART II - BILLET AND PERSONNEL REQUIREMENTS

II.A. BILLET REQUIREMENTS

SOURCE OF MANPOWER: TFFMS / NTMPS **DATE:** Oct 2002

II.A.1.a. OPERATIONAL AND FLEET SUPPORT ACTIVITY ACTIVATION SCHEDULE

ACTIVITY, UIC		PFYs	CFY03	FY04	FY05	FY06	FY07
OPERATIONAL ACTIVITIES - USN							
COMARSURVRECFORSIXTHFLT DET	30191	1	0	0	0	0	0
NRL FLTOPSDET, NAS Patuxent River	48498	1	0	0	0	0	0
PATRECONFORCE FSU DET 5	4354A	0	1	0	0	0	0
VP Squadron ACDU - East [model: VP-5]	09XXX	6	0	0	0	0	0
VP Squadron RSRV - East [model: VP-66]	091XX	4	0	0	0	0	0
VP-30 FRS, NAS Jacksonville	09047	1	0	0	0	0	0
VP-30 VR Detachment, NAS Jacksonville	53894	1	0	0	0	0	0
VX-1, NAS Patuxent River	55600	1	0	0	0	0	0
PATRECONFORCE FSU DET 10	4353A	0	1	0	0	0	0
VP Squadron ACDU - Hawaii [model: VP-4]	096XX	3	0	0	0	0	0
VP Squadron ACDU - West [model: VP-1]	096XX	3	0	0	0	0	0
VP Squadron RSRV - West [model: VP-65]	09XXX	3	0	0	0	0	0
TOTAL:		24	2	0	0	0	0
FLEET SUPPORT ACTIVITIES - USN							
AIMD NAS Brunswick	44314	1	0	0	0	0	0
AIMD NAS Jacksonville	44319	1	0	0	0	0	0
AIMD NAS Sigonella	44330	1	0	0	0	0	0
AIMD NS Roosevelt Roads	44373	1	0	0	0	0	0
COMPATRECON WING 05, NAS Brunswick	53823	1	0	0	0	0	0
COMPATRECON WING 11, NAS Jacksonville	09461	1	0	0	0	0	0
FLT MARITIME PATROL MOCC JAX	55620	1	0	0	0	0	0
FLT MARITIME PATROL MOCC MED	55637	1	0	0	0	0	0
NAWC ACDIV PAX RIVER	49860	1	0	0	0	0	0
NRL FLTSUPPDET, NAS Patuxent River	31686	1	0	0	0	0	0
Reserve Patrol Wing (Atlantic), NAS Willow	09158	1	0	0	0	0	0
VP-30 FMS, NAS Jacksonville	42335	1	0	0	0	0	0
VPU-1, NAS Brunswick	53869	1	0	0	0	0	0
VX-20	39785	1	0	0	0	0	0
AIMD MCBH Kaneohe Bay	44312	1	0	0	0	0	0
AIMD NAF Atsugi	44323	1	0	0	0	0	0
AIMD NAF Diego Garcia	44337	1	0	0	0	0	0
AIMD NAF Misawa	44331	1	0	0	0	0	0
AIMD NAS Whidbey Island	44329	1	0	0	0	0	0
COMPATRECON WING 10, NAS Whidbey	55165	1	0	0	0	0	0
COMPATWING 1	09451	1	0	0	0	0	0
Patrol Recon Force Pacific, MCB Kaneohe Bay	09517	1	0	0	0	0	0
Patrol Reconnaissance Wing One Det Diego	44468	1	0	0	0	0	0
Patrol Reconnaissance Wing One Det Misawa	35667	1	0	0	0	0	0
Patrol Reconnaissance Wing One Det Okinawa	32515	1	0	0	0	0	0
Reserve Patrol Wing (Pacific), NAS Moffett Field	09160	1	0	0	0	0	0
VPU-2, MCB Kaneohe Bay	09244	1	0	0	0	0	0

II.A.1.a. OPERATIONAL AND FLEET SUPPORT ACTIVITY ACTIVATION SCHEDULE

ACTIVITY, UIC	PFYs	CFY03	FY04	FY05	FY06	FY07
TOTAL:	27	0	0	0	0	0

II.A.1.b. BILLETS REQUIRED FOR OPERATIONAL AND FLEET SUPPORT ACTIVITIES

ACTIVITY, UIC, PHASING INCREMENT	BILLETS OFF	BILLETS ENL	DESIG/ RATING	PNEC/ PMOS	SNEC/ SMOS
OPERATIONAL ACTIVITIES - USN					
COMARSURVRECFORSIXTHFLT DET, 30191					
ACDU	0	1	AT1	9402	
ACTIVITY TOTAL:	0	1			
NRL FLTOPSDET, NAS Patuxent River, 48498					
ACDU	3	0	1311		
	3	0	1321		
	0	1	ADCS		
	0	1	AD1	8251	8319
	0	1	AD2	8241	
	0	3	AD2	8319	
	0	1	ADAN	8241	
	0	2	AE2	8251	
	0	2	AK2		
	0	1	AMC	8319	
	0	1	AM2	8241	8319
	0	2	AMAN		
	0	1	AME2	8319	
	0	1	AO2	8241	
	0	1	ATCS		
	0	1	AT1	8265	
	0	1	AT2	8265	
	0	1	AZ2		
	0	1	YN2		
ACTIVITY TOTAL:	6	22			
PATRECONFORCE FSU DET 5, 4354A, FY03 Increment					
ACDU	0	1	AT1	9402	
ACTIVITY TOTAL:	0	1			
VP Squadron ACDU - East [model: VP-5], 09XXX					
ACDU	12	0	1302		
	270	0	1311		
	180	0	1321		
	6	0	1520		
	6	0	1630		
	6	0	2102		
	6	0	6320		
	6	0	6330		
	6	0	6380		
	6	0	7360		
	0	6	ADC	8319	
	0	36	AD1	8319	

II.A.1.b. BILLETS REQUIRED FOR OPERATIONAL AND FLEET SUPPORT ACTIVITIES

ACTIVITY, UIC, PHASING INCREMENT	BILLETS OFF	BILLETS ENL	DESIG/ RATING	PNEC/ PMOS	SNEC/ SMOS
ACDU	0	6	AD2	6418	
	0	30	AD2	8319	
	0	6	AD3	6418	
	0	54	AD3	8819	
	0	12	ADAN	6418	
	0	60	ADAN	8819	
	0	6	AEC	8319	
	0	24	AE1	8319	
	0	6	AE2	7136	
	0	24	AE2	8319	
	0	6	AE3	7137	
	0	6	AE3	7175	
	0	30	AE3	8819	
	0	48	AEAN	8819	
	0	6	AK1		
	0	18	AK2		
	0	18	AK3		
	0	12	AKAN		
	0	6	AMC	8319	
	0	42	AM1	8319	
	0	6	AM2		
	0	48	AM2	8319	
	0	6	AM3	7213	
	0	54	AM3	8819	
	0	12	AMAN		
	0	84	AMAN	8819	
	0	12	AME1	8319	
	0	12	AME2	8319	
	0	6	AME3	8319	
	0	18	AMEAN	8319	
	0	6	AOC	8319	
	0	18	AO1	8319	0812
	0	18	AO2	8319	
	0	6	AO3	6802	
	0	30	AO3	8319	
	0	12	AOAN		
	0	30	AOAN	8319	
	0	6	APOCM	8300	
	0	12	APOCS		
	0	6	APOCS	8251	
	0	24	APOCS	8800	
	0	18	APOC	8251	
	0	6	APOC	8319	
	0	30	APOC	8319	8800
	0	24	APO1		
	0	48	APO1	8251	
	0	12	APO1	8319	
	0	6	APO1		9590

II.A.1.b. BILLETS REQUIRED FOR OPERATIONAL AND FLEET SUPPORT ACTIVITIES

ACTIVITY, UIC, PHASING INCREMENT	BILLETS OFF	BILLETS ENL	DESIG/ RATING	PNEC/ PMOS	SNEC/ SMOS
ACDU	0	6	APO1		9595
	0	12	APO2		
	0	72	APO2	8251	
	0	36	APO3	8251	
	0	6	ATC	8319	
	0	6	ATC	9402	
	0	12	AT1	6719	
	0	12	AT1	8319	
	0	6	AT1	8319	6701
	0	18	AT1	9402	
	0	6	AT2	6612	
	0	6	AT2	6664	9526
	0	6	AT2	6717	
	0	18	AT2	6719	
	0	6	AT2	6721	
	0	18	AT2	8319	
	0	30	AT2	9402	
	0	6	AT3	6526	
	0	6	AT3	6529	
	0	6	AT3	6612	
	0	12	AT3	6664	
	0	6	AT3	6716	
	0	54	AT3	8819	
	0	36	AT3	9402	
	0	6	AT3		9527
	0	6	ATAN	6605	6710
	0	6	ATAN	6609	6717
	0	6	ATAN	6717	
	0	54	ATAN	8819	
	0	6	AWCS	7841	
	0	6	AWC	7841	
	0	6	AWC	7861	
	0	30	AW1	7841	
	0	6	AW1	7861	
	0	66	AW2	7841	
	0	30	AW2	7861	
	0	54	AW3	7841	
	0	24	AW3	7861	
	0	30	AWAN	7841	
	0	24	AWAN	7861	
	0	6	AZ1		
	0	6	AZ1	6315	
	0	30	AZ2		
	0	6	AZ3		
	0	18	AZAN		
	0	6	DK2	2905	
	0	6	DK3		
	0	6	HM2	8406	

II.A.1.b. BILLETS REQUIRED FOR OPERATIONAL AND FLEET SUPPORT ACTIVITIES

ACTIVITY, UIC, PHASING INCREMENT	BILLETS OFF	BILLETS ENL	DESIG/ RATING	PNEC/ PMOS	SNEC/ SMOS
ACDU	0	6	HM3	8406	
	0	6	IS1	3924	
	0	6	IS2		
	0	6	IS3		
	0	6	IT1	2781	
	0	6	IT3	2735	
	0	12	MS2		
	0	18	MS3		
	0	24	MSSN		
	0	6	NC1		
	0	6	PH2	8133	
	0	6	PH2	8288	
	0	6	PH3	8133	
	0	6	PN1		
	0	6	PN2		
	0	6	PN3		
	0	12	PNSN		
	0	6	POCM		9580
	0	6	PO1		9571
	0	24	PO2	6718	
	0	6	PO3		
	0	6	PR1		
	0	18	PR2		
	0	12	PR3		
	0	18	PRAN		
	0	6	SKC		
	0	6	YNC		
	0	12	YN2		
	0	6	YN3		
	0	18	YNSN		
	0	144	AN		
ACTIVITY TOTAL:	504	2310			
VP Squadron RSRV - East [model: VP-66], 091XX					
TAR	28	0	1311		
	24	0	1321		
	4	0	1520		
	4	0	6330		
	0	4	ADC	8319	
	0	8	AD1	8319	
	0	8	AD2	8319	
	0	16	AD3	8819	
	0	4	ADAN	6418	
	0	8	AE1	8319	
	0	4	AE2	7136	
	0	8	AE2	8319	
	0	4	AE3	7137	

II.A.1.b. BILLETS REQUIRED FOR OPERATIONAL AND FLEET SUPPORT ACTIVITIES

ACTIVITY, UIC, PHASING INCREMENT	BILLETS OFF	BILLETS ENL	DESIG/ RATING	PNEC/ PMOS	SNEC/ SMOS
TAR	0	4	AE3	7175	
	0	4	AE3	8819	
	0	4	AEAN	8819	
	0	4	AK1		
	0	4	AK2		
	0	4	AK2		9590
	0	4	AK3		
	0	4	AMC	8319	
	0	4	AM1	8319	
	0	4	AM1	8319	9595
	0	4	AM2	7232	
	0	16	AM2	8319	
	0	4	AM3	7213	
	0	16	AM3	8819	
	0	16	AMAN	8819	
	0	4	AME1	8319	
	0	4	AME2	8319	
	0	4	AO1	8271	
	0	4	AO1	8319	0812
	0	4	AO2	8271	
	0	4	AO2	8319	
	0	4	AO3	8271	
	0	8	APOCS	8800	
	0	8	APOC		
	0	8	APOC	8251	
	0	4	APOC	8319	8800
	0	8	APO1		
	0	32	APO1	8251	
	0	4	APO1		9595
	0	4	APO2		
	0	16	APO2	8251	
	0	4	ATC	8262	
	0	4	ATC	8319	
	0	4	AT1	8262	
	0	8	AT1	8319	
	0	4	AT2	6664	9526
	0	12	AT2	8262	
	0	8	AT2	8319	
	0	4	AT3		
	0	4	AT3	6526	
	0	4	AT3	6664	
	0	4	AT3	8262	
	0	8	AT3	8819	
	0	8	ATAN	8819	
	0	4	AWC	7821	
	0	8	AW1	7821	
	0	4	AW1	7861	
	0	8	AW2	7821	

II.A.1.b. BILLETS REQUIRED FOR OPERATIONAL AND FLEET SUPPORT ACTIVITIES

ACTIVITY, UIC, PHASING INCREMENT	BILLETS OFF	BILLETS ENL	DESIG/ RATING	PNEC/ PMOS	SNEC/ SMOS
TAR	0	4	AW2	7861	
	0	4	AW3	7821	
	0	4	AW3	7861	
	0	4	AZ1		
	0	8	AZ2		
	0	4	AZ2	6303	
	0	4	HM2	8406	
	0	4	IT3	2735	
	0	4	MS3		
	0	4	MSSN		
	0	4	NC1		
	0	8	PN2		
	0	4	PN3		
	0	4	POCM		9580
	0	4	PR1		
	0	8	PR3		
	0	4	PRAN		
	0	4	YNC		
	0	4	YN2		
	0	8	YN3		
SELRES	8	0	1301		
	136	0	1311		
	84	0	1321		
	4	0	1630		
	4	0	2102		
	4	0	6380		
	0	4	AD2	6418	
	0	4	AD2	8319	
	0	4	AD3	6418	
	0	4	AD3	8819	
	0	4	ADAN	6418	
	0	16	ADAN	8819	
	0	4	AE3	8819	
	0	8	AEAN	8819	
	0	4	AK2		
	0	4	AK3		
	0	4	AKAN		
	0	8	AM1	8319	
	0	4	AM2	8319	
	0	4	AM3	7213	
	0	4	AM3	8819	
	0	4	AMAN		
	0	20	AMAN	8819	
	0	4	AME1	8319	
	0	4	AME3	8319	
	0	8	AMEAN	8319	
	0	4	AOC	8271	

II.A.1.b. BILLETS REQUIRED FOR OPERATIONAL AND FLEET SUPPORT ACTIVITIES

ACTIVITY, UIC, PHASING INCREMENT	BILLETS OFF	BILLETS ENL	DESIG/ RATING	PNEC/ PMOS	SNEC/ SMOS
SELRES	0	4	AO1	8271	
	0	4	AO1	8319	0812
	0	12	AO2	8271	
	0	4	AO3		
	0	16	AO3	8271	
	0	8	AOAN		
	0	12	AOAN	8271	
	0	4	APOCM	8300	
	0	8	APOCS		
	0	4	APOCS	8251	
	0	16	APO1		
	0	4	APO1	8251	
	0	44	APO2	8251	
	0	4	APO3		
	0	4	AT1	8262	
	0	4	AT2	6612	
	0	4	AT2	6617	
	0	4	AT2	8319	
	0	4	AT3	6534	9527
	0	4	AT3	6612	
	0	4	AT3	6664	
	0	16	AT3	8262	
	0	12	AT3	8819	
	0	4	AT3		9527
	0	4	ATAN	6710	
	0	4	ATAN	6716	
	0	8	ATAN	6717	
	0	8	ATAN	8819	
	0	4	AWCS	7821	
	0	4	AWC	7861	
	0	8	AW1	7821	
	0	4	AW1	7861	
	0	24	AW2	7821	
	0	16	AW2	7861	
	0	32	AW3	7821	
	0	12	AW3	7861	
	0	20	AWAN	7821	
	0	8	AWAN	7861	
	0	4	AZ3		
	0	4	AZAN		
	0	8	DK2		
	0	4	DK3		
	0	4	HM3	8406	
	0	4	IS1		
	0	8	ISSN		
	0	8	MS2		
	0	4	MS3		
	0	12	MSSN		

II.A.1.b. BILLETS REQUIRED FOR OPERATIONAL AND FLEET SUPPORT ACTIVITIES

ACTIVITY, UIC, PHASING INCREMENT	BILLETS OFF	BILLETS ENL	DESIG/ RATING	PNEC/ PMOS	SNEC/ SMOS
SELRES	0	4	PH2	8143	
	0	4	PH2	8288	
	0	4	PH3	8133	
	0	4	PN1		
	0	4	PN3		
	0	20	PO2	6718	
	0	4	PO3		
	0	8	YNSN		
	0	80	AN		
ACTIVITY TOTAL:	300	1152			
VP-30 FRS, NAS Jacksonville, 09047					
ACDU	1	0	1110		
	1	0	1120		
	10	0	1302		
	58	0	1312		
	1	0	1321		
	59	0	1322		
	2	0	1630		
	2	0	2102		
	1	0	6320		
	1	0	6410		
	0	1	ADCS		
	0	3	ADC	8319	
	0	2	AD1	6415	
	0	8	AD1	8319	
	0	16	AD2	8319	
	0	22	AD3	8819	
	0	30	ADAN	8819	
	0	1	AECS	7182	
	0	1	AEC	8319	
	0	1	AE1	7182	
	0	5	AE1	8319	
	0	1	AE2	7182	
	0	8	AE2	8319	
	0	12	AE3	8819	
	0	17	AEAN	8819	
	0	2	AK1		
	0	2	AK2		
	0	3	AK3		
	0	4	AKAN		
	0	1	AMC		
	0	3	AMC	8319	
	0	12	AM1	8319	
	0	21	AM2	8319	
	0	22	AM3	8819	
	0	39	AMAN	8819	

II.A.1.b. BILLETS REQUIRED FOR OPERATIONAL AND FLEET SUPPORT ACTIVITIES

ACTIVITY, UIC, PHASING INCREMENT	BILLETS OFF	BILLETS ENL	DESIG/ RATING	PNEC/ PMOS	SNEC/ SMOS
ACDU	0	1	AMEC	8319	
	0	3	AME1	8319	
	0	5	AME2	8319	
	0	6	AME3	8319	
	0	9	AMEAN	8319	
	0	1	AOC	8319	
	0	1	AO1	8271	
	0	4	AO1	8319	0812
	0	5	AO2	8319	
	0	7	AO3		
	0	9	AOAN		
	0	1	APOCM	8300	
	0	6	APOCS		
	0	1	APOCS	8251	
	0	1	APOCS	8251	9502
	0	2	APOC		
	0	7	APOC	8251	9502
	0	6	APOC	8319	
	0	11	APO1		
	0	28	APO1	8251	9502
	0	2	APO1	8319	
	0	1	APO1		9590
	0	1	APO1		9595
	0	2	APO2		
	0	30	APO2	8251	9502
	0	1	APO2		9590
	0	5	APO3		
	0	1	ATCS	6582	
	0	1	ATC	8319	
	0	1	ATC	9402	
	0	5	ATC	9402	9502
	0	1	AT1	6582	6701
	0	4	AT1	8319	
	0	14	AT1	9402	9502
	0	1	AT2	6582	
	0	8	AT2	8319	
	0	25	AT2	9402	9502
	0	11	AT3	8819	
	0	17	ATAN	8819	
	0	1	AWCM	7841	9502
	0	1	AWCS	7841	9502
	0	1	AWCS	7861	9502
	0	1	AWC	7841	
	0	7	AWC	7841	9502
	0	4	AWC	7861	9502
	0	5	AWC	7877	9502
	0	16	AW1	7841	9502
	0	1	AW1	7861	

II.A.1.b. BILLETS REQUIRED FOR OPERATIONAL AND FLEET SUPPORT ACTIVITIES

ACTIVITY, UIC, PHASING INCREMENT	BILLETS OFF	BILLETS ENL	DESIG/ RATING	PNEC/ PMOS	SNEC/ SMOS
ACDU	0	16	AW1	7861	9502
	0	23	AW2	7841	9502
	0	15	AW2	7861	9502
	0	2	AW3	7841	
	0	2	AW3	7861	
	0	3	AWAN	7841	
	0	4	AWAN	7861	
	0	1	AZC		
	0	1	AZ1		
	0	1	AZ1	6315	
	0	5	AZ2		
	0	1	AZ2	6303	
	0	2	AZ3		
	0	6	AZAN		
	0	1	DM2		
	0	2	HM2	8406	
	0	2	HM3	8406	
	0	1	IS1		
	0	1	ITC	2781	
	0	1	IT1		
	0	1	IT1	2781	
	0	1	IT2		
	0	2	IT2	2780	
	0	1	IT3		
	0	4	IT3	2735	
	0	1	NCC		
	0	1	NC1		
	0	2	PN2		
	0	1	POCM		9580
	0	1	POC		
	0	3	PO1		9571
	0	7	PO2	6718	
	0	1	PRC		
	0	2	PR1		
	0	3	PR2		
	0	4	PR3		
	0	5	PRAN		
	0	1	SKC		
	0	1	YNCS		
	0	3	YN1		
	0	9	YN2		
	0	7	YN3		
	0	18	YNSN		
	0	59	AN		
	0	3	SN		
ACTIVITY TOTAL:	136	750			

II.A.1.b. BILLETS REQUIRED FOR OPERATIONAL AND FLEET SUPPORT ACTIVITIES

ACTIVITY, UIC, PHASING INCREMENT	BILLETS OFF	BILLETS ENL	DESIG/ RATING	PNEC/ PMOS	SNEC/ SMOS
VP-30 VR Detachment, NAS Jacksonville, 53894					
ACDU	8	0	1312		
	0	4	APOC	8251	
	0	1	APOC	8284	
	0	1	APO1	8251	
	0	2	APO1	8289	
	0	3	APO2	8241	
	0	3	APO2	8289	
	0	1	ATCS	8265	
	0	2	ATC	8265	
	0	3	AT1	8265	
	0	1	YN2		
	0	1		8251	
ACTIVITY TOTAL:	8	22			
VX-1, NAS Patuxent River, 55600					
ACDU	1	0	1120		
	13	0	1312		
	11	0	1322		
	2	0	1512		
	1	0	2102		
	1	0	3100		
	1	0	6380		
	1	0	6410		
	1	0	7380		
	0	2	AD1	8319	
	0	2	AD2	8319	
	0	2	AD3	8819	
	0	2	ADAN	8819	
	0	1	AE1	8319	
	0	3	AE3	8319	
	0	2	AEAN	8819	
	0	1	AK1		
	0	2	AK2		
	0	1	AK2		9590
	0	2	AK3		
	0	2	AKAN		
	0	1	AMC	8319	
	0	3	AM1	8319	
	0	1	AM2	8319	
	0	3	AM3	8819	
	0	7	AMAN	8819	
	0	1	AME1	8319	
	0	1	AME3	8319	
	0	2	AMEAN	8319	
	0	1	AOC	8319	
	0	1	AO2	8319	

II.A.1.b. BILLETS REQUIRED FOR OPERATIONAL AND FLEET SUPPORT ACTIVITIES

ACTIVITY, UIC, PHASING INCREMENT	BILLETS OFF	BILLETS ENL	DESIG/ RATING	PNEC/ PMOS	SNEC/ SMOS
ACDU	0	1	AO3		
	0	2	AOAN		
	0	1	APOCM	8300	
	0	3	APOCS		
	0	2	APOCS	8800	
	0	1	APOC		
	0	1	APOC	8251	
	0	3	APO1		
	0	3	APO1	8251	
	0	1	APO1		9595
	0	3	APO2		
	0	4	APO2	8251	
	0	3	APO3		
	0	2	AT1	8319	
	0	1	AT1	9402	
	0	2	AT2	8319	
	0	3	AT2	9402	
	0	2	AT3	8819	
	0	2	ATAN	8819	
	0	1	AWCS	7841	
	0	1	AWC	7841	
	0	3	AW1	7841	
	0	1	AW1	7861	
	0	5	AW2	7841	
	0	5	AW2	7861	
	0	1	AZC		
	0	1	AZ1	6315	
	0	4	AZ2		
	0	2	AZ3		
	0	3	AZAN		
	0	1	CTA1	9190	
	0	1	DM2		
	0	1	IS2		
	0	1	ITC	2735	
	0	1	IT2	2735	
	0	1	IT3		
	0	3	IT3	2735	
	0	1	NC1		
	0	1	POCM		9580
	0	4	PO2		
	0	1	PO3		
	0	1	PR1		
	0	1	PR2		
	0	2	PR3		
	0	1	PRAN		
	0	1	SKC		
	0	1	YNC		
	0	1	YN1		

II.A.1.b. BILLETS REQUIRED FOR OPERATIONAL AND FLEET SUPPORT ACTIVITIES

ACTIVITY, UIC, PHASING INCREMENT	BILLETS OFF	BILLETS ENL	DESIG/ RATING	PNEC/ PMOS	SNEC/ SMOS
ACDU	0	4	YN2		
	0	3	YN3		
	0	5	YNSN		
	0	36	AN		
ACTIVITY TOTAL:	32	182			
PATRECONFORCE FSU DET 10, 4353A, FY03 Increment					
ACDU	0	1	AT1	9402	
ACTIVITY TOTAL:	0	1			
VP Squadron ACDU - Hawaii [model: VP-4], 096XX					
ACDU	6	0	1302		
	153	0	1311		
	102	0	1321		
	3	0	1520		
	3	0	1630		
	3	0	2102		
	3	0	6320		
	3	0	6380		
	3	0	7340		
	3	0	7360		
	0	3	ADC	8319	
	0	18	AD1	8319	
	0	6	AD2	6418	
	0	15	AD2	8319	
	0	3	AD3	6418	
	0	30	AD3	8819	
	0	6	ADAN	6418	
	0	33	ADAN	8819	
	0	3	AEC	8319	
	0	12	AE1	8319	
	0	3	AE2	7136	
	0	12	AE2	8319	
	0	3	AE3	7137	
	0	3	AE3	7175	
	0	18	AE3	8819	
	0	24	AEAN	8819	
	0	3	AK1		
	0	9	AK2		
	0	9	AK3		
	0	3	AKAN		
	0	3	AMC	8319	
	0	21	AM1	8319	
	0	3	AM2		
	0	24	AM2	8319	
	0	3	AM3	7213	

II.A.1.b. BILLETS REQUIRED FOR OPERATIONAL AND FLEET SUPPORT ACTIVITIES

ACTIVITY, UIC, PHASING INCREMENT	BILLETS OFF	BILLETS ENL	DESIG/ RATING	PNEC/ PMOS	SNEC/ SMOS
ACDU	0	30	AM3	8819	
	0	6	AMAN		
	0	45	AMAN	8819	
	0	6	AME1	8319	
	0	9	AME2	8319	
	0	3	AME3	8319	
	0	9	AMEAN	8319	
	0	3	AOC	8319	
	0	12	AO1	8319	0812
	0	9	AO2	8319	
	0	6	AO3	6802	
	0	15	AO3	8319	
	0	21	AOAN		
	0	3	APOCM	8300	
	0	12	APOCS		
	0	3	APOCS	8251	
	0	6	APOCS	8800	
	0	9	APOC	8251	
	0	3	APOC	8319	
	0	15	APOC	8319	8800
	0	12	APO1		
	0	30	APO1	8251	
	0	6	APO1	8319	
	0	3	APO1		9590
	0	3	APO1		9595
	0	6	APO2		
	0	60	APO2	8251	
	0	3	APO3	8819	
	0	3	ATC	8319	
	0	3	ATC	9402	
	0	15	AT1	8319	
	0	3	AT1	8319	6701
	0	12	AT1	9402	
	0	3	AT2	6612	
	0	3	AT2	6614	
	0	3	AT2	6664	9526
	0	3	AT2	6717	
	0	3	AT2	6721	
	0	18	AT2	8319	
	0	15	AT2	9402	
	0	3	AT3	6526	
	0	3	AT3	6529	
	0	3	AT3	6612	
	0	6	AT3	6664	
	0	3	AT3	6716	
	0	27	AT3	8819	
	0	21	AT3	9402	
	0	3	AT3		9527

II.A.1.b. BILLETS REQUIRED FOR OPERATIONAL AND FLEET SUPPORT ACTIVITIES

ACTIVITY, UIC, PHASING INCREMENT	BILLETS OFF	BILLETS ENL	DESIG/ RATING	PNEC/ PMOS	SNEC/ SMOS
ACDU	0	3	ATAN	6605	6710
	0	3	ATAN	6609	6717
	0	3	ATAN	6717	
	0	30	ATAN	8819	
	0	3	AWCS	7841	
	0	3	AWC	7841	
	0	3	AWC	7861	
	0	15	AW1	7841	
	0	6	AW1	7861	
	0	39	AW2	7841	
	0	15	AW2	7861	
	0	30	AW3	7841	
	0	15	AW3	7861	
	0	18	AWAN	7841	
	0	12	AWAN	7861	
	0	3	AZ1		
	0	3	AZ1	6315	
	0	15	AZ2		
	0	3	AZ3		
	0	12	AZAN		
	0	3	DK2	2905	
	0	3	DK3		
	0	3	HM2	8406	
	0	3	HM3	8406	
	0	3	IS1	3924	
	0	3	IS2		
	0	3	IS3		
	0	3	IT1	2781	
	0	3	IT3	2735	
	0	6	MS2		
	0	9	MS3		
	0	15	MSSN		
	0	3	NC1		
	0	3	PH2	8133	
	0	3	PH2	8288	
	0	3	PH3	8133	
	0	3	PN1		
	0	3	PN2		
	0	3	PN3		
	0	6	PNSN		
	0	3	POCM		9580
	0	3	PO1		9571
	0	12	PO2	6718	
	0	3	PO3		
	0	3	PR1		
	0	9	PR2		
	0	6	PR3		
	0	9	PRAN		

II.A.1.b. BILLETS REQUIRED FOR OPERATIONAL AND FLEET SUPPORT ACTIVITIES

ACTIVITY, UIC, PHASING INCREMENT	BILLETS OFF	BILLETS ENL	DESIG/ RATING	PNEC/ PMOS	SNEC/ SMOS
ACDU	0	3	SKC		
	0	3	YNC		
	0	6	YN2		
	0	3	YN3		
	0	9	YNSN		
	0	72	AN		
ACTIVITY TOTAL:	282	1233			
VP Squadron ACDU - West [model: VP-1], 096XX					
ACDU	6	0	1302		
	135	0	1311		
	90	0	1321		
	3	0	1520		
	3	0	1630		
	3	0	2102		
	3	0	6320		
	3	0	6380		
	3	0	7340		
	3	0	7360		
	0	3	ADC	8319	
	0	18	AD1	8319	
	0	3	AD2	6418	
	0	15	AD2	8319	
	0	3	AD3	6418	
	0	27	AD3	8819	
	0	6	ADAN	6418	
	0	30	ADAN	8819	
	0	3	AEC	8319	
	0	12	AE1	8319	
	0	3	AE2	7136	
	0	12	AE2	8319	
	0	3	AE3	7137	
	0	3	AE3	7175	
	0	15	AE3	8819	
	0	24	AEAN	8819	
	0	3	AK1		
	0	9	AK2		
	0	9	AK3		
	0	6	AKAN		
	0	3	AMC	8319	
	0	21	AM1	8319	
	0	3	AM2		
	0	24	AM2	8319	
	0	3	AM3	7213	
	0	27	AM3	8819	
	0	6	AMAN		
	0	42	AMAN	8819	

II.A.1.b. BILLETS REQUIRED FOR OPERATIONAL AND FLEET SUPPORT ACTIVITIES

ACTIVITY, UIC, PHASING INCREMENT	BILLETS OFF	BILLETS ENL	DESIG/ RATING	PNEC/ PMOS	SNEC/ SMOS
ACDU	0	6	AME1	8319	
	0	6	AME2	8319	
	0	3	AME3	8319	
	0	9	AMEAN	8319	
	0	3	AOC	8319	
	0	9	AO1	8319	0812
	0	9	AO2	8319	
	0	3	AO3	6802	
	0	15	AO3	8319	
	0	21	AOAN		
	0	3	APOCM	8300	
	0	6	APOCS		
	0	3	APOCS	8251	
	0	12	APOCS	8800	
	0	9	APOC	8251	
	0	3	APOC	8319	
	0	15	APOC	8319	8800
	0	12	APO1		
	0	30	APO1	8251	
	0	6	APO1	8319	
	0	3	APO1		9590
	0	3	APO1		9595
	0	6	APO2		
	0	48	APO2	8251	
	0	3	ATC	8319	
	0	3	ATC	9402	
	0	12	AT1	8319	
	0	3	AT1	8319	6701
	0	9	AT1	9402	
	0	3	AT2	6612	
	0	3	AT2	6664	9526
	0	3	AT2	6717	
	0	3	AT2	6721	
	0	18	AT2	8319	
	0	15	AT2	9402	
	0	3	AT3	6526	
	0	3	AT3	6529	
	0	3	AT3	6612	
	0	6	AT3	6664	
	0	3	AT3	6716	
	0	27	AT3	8819	
	0	18	AT3	9402	
	0	3	AT3		9527
	0	3	ATAN	6605	6710
	0	3	ATAN	6609	6717
	0	3	ATAN	6717	
	0	27	ATAN	8819	
	0	3	AWCS	7841	

II.A.1.b. BILLETS REQUIRED FOR OPERATIONAL AND FLEET SUPPORT ACTIVITIES

ACTIVITY, UIC, PHASING INCREMENT	BILLETS OFF	BILLETS ENL	DESIG/ RATING	PNEC/ PMOS	SNEC/ SMOS
ACDU	0	3	AWC	7841	
	0	3	AWC	7861	
	0	15	AW1	7841	
	0	3	AW1	7861	
	0	33	AW2	7841	
	0	15	AW2	7861	
	0	27	AW3	7841	
	0	12	AW3	7861	
	0	15	AWAN	7841	
	0	12	AWAN	7861	
	0	3	AZ1		
	0	3	AZ1	6315	
	0	15	AZ2		
	0	3	AZ3		
	0	9	AZAN		
	0	3	DK2	2905	
	0	3	DK3		
	0	3	HM2	8406	
	0	3	HM3	8406	
	0	3	IS1	3924	
	0	3	IS2		
	0	3	IS3		
	0	3	IT1	2781	
	0	3	IT3	2735	
	0	6	MS2		
	0	9	MS3		
	0	15	MSSN		
	0	3	NC1		
	0	3	PH2	8133	
	0	3	PH2	8288	
	0	3	PH3	8133	
	0	3	PN1		
	0	3	PN2		
	0	3	PN3		
	0	6	PNSN		
	0	3	POCM		9580
	0	3	PO1		9571
	0	12	PO2	6718	
	0	3	PO3		
	0	3	PR1		
	0	9	PR2		
	0	6	PR3		
	0	9	PRAN		
	0	3	SKC		
	0	3	YNC		
	0	6	YN2		
	0	3	YN3		
	0	9	YNSN		

II.A.1.b. BILLETS REQUIRED FOR OPERATIONAL AND FLEET SUPPORT ACTIVITIES

ACTIVITY, UIC, PHASING INCREMENT	BILLETS OFF	BILLETS ENL	DESIG/ RATING	PNEC/ PMOS	SNEC/ SMOS
ACDU	0	72	AN		
ACTIVITY TOTAL:	252	1158			
VP Squadron RSRV - West [model: VP-65], 09XXX					
TAR	24	0	1311		
	15	0	1321		
	3	0	1520		
	3	0	6330		
	3	0	7340		
	0	3	ADC	8319	
	0	3	AD1	8251	8319
	0	6	AD1	8319	
	0	3	AD2	6418	
	0	6	AD2	8319	
	0	3	AD3	6418	
	0	9	AD3	8819	
	0	3	ADAN	6418	
	0	3	ADAN	8819	
	0	6	AE1	8319	
	0	3	AE2	7136	
	0	6	AE2	8319	
	0	3	AE3	7137	
	0	3	AE3	7175	
	0	3	AE3	8819	
	0	3	AEAN	8819	
	0	3	AK1		
	0	6	AK2		
	0	3	AK3		
	0	3	AKAN		
	0	3	AMC	8319	
	0	3	AM1	8251	
	0	3	AM1	8319	
	0	3	AM1	8319	9595
	0	3	AM2	7232	
	0	6	AM2	8251	
	0	12	AM2	8319	
	0	3	AM3	7213	
	0	9	AM3	8819	
	0	3	AMAN		
	0	9	AMAN	8819	
	0	3	AME1	8319	
	0	3	AME2	8319	
	0	3	AMEAN	8319	
	0	3	AO1	8271	
	0	3	AO1	8319	0812
	0	3	AO2	8271	
	0	3	AO2	8319	

II.A.1.b. BILLETS REQUIRED FOR OPERATIONAL AND FLEET SUPPORT ACTIVITIES

ACTIVITY, UIC, PHASING INCREMENT	BILLETS OFF	BILLETS ENL	DESIG/ RATING	PNEC/ PMOS	SNEC/ SMOS
TAR	0	3	AO3	6802	
	0	3	AO3	8271	
	0	6	APOCS		
	0	9	APOC		
	0	6	APOC	8251	
	0	3	APO1		
	0	9	APO1	8251	
	0	12	APO2	8251	
	0	3	ATC	8262	
	0	3	ATC	8319	
	0	3	AT1		
	0	3	AT1	8262	
	0	6	AT1	8319	
	0	3	AT2	6605	6606
	0	3	AT2	6612	
	0	9	AT2	8262	
	0	6	AT2	8319	
	0	3	AT3	6526	
	0	3	AT3	6534	9527
	0	3	AT3	6611	6609
	0	3	AT3	6634	6529
	0	3	AT3	6664	
	0	6	AT3	8262	
	0	6	AT3	8819	
	0	3	AT3		9527
	0	3	ATAN		
	0	3	ATAN	6611	6609
	0	3	ATAN	6612	
	0	3	ATAN	6613	
	0	6	ATAN	8819	
	0	3	AWC	7861	
	0	6	AW1	7841	
	0	6	AW2	7841	
	0	6	AW2	7861	
	0	3	AW3	7841	
	0	3	AW3	7861	
	0	3	AZ1		
	0	6	AZ2		
	0	3	AZ2	6303	
	0	3	DK2		
	0	3	DK2	2905	
	0	3	HM2	8406	
	0	3	IT3	2735	
	0	3	MS3		
	0	3	MSSN		
	0	3	NC1		
	0	6	PN2		
	0	3	POCM		9580

II.A.1.b. BILLETS REQUIRED FOR OPERATIONAL AND FLEET SUPPORT ACTIVITIES

ACTIVITY, UIC, PHASING INCREMENT	BILLETS OFF	BILLETS ENL	DESIG/ RATING	PNEC/ PMOS	SNEC/ SMOS
TAR	0	3	PR1		
	0	6	PR3		
	0	3	PRAN		
	0	3	YNC		
	0	3	YN2		
	0	6	YN3		
SELRES	6	0	1302		
	96	0	1311		
	66	0	1321		
	3	0	1630		
	3	0	2102		
	3	0	6321		
	0	3	AD2	8319	
	0	6	AD3	8819	
	0	9	ADAN	8819	
	0	3	AE3	8819	
	0	9	AEAN	8819	
	0	3	AK3		
	0	6	AM1	8319	
	0	3	AM2	8319	
	0	3	AM3	8819	
	0	15	AMAN	8819	
	0	3	AME1	8319	
	0	3	AME3	8319	
	0	3	AMEAN	8319	
	0	3	AOC	8271	
	0	3	AO1	8271	
	0	3	AO1	8319	0812
	0	9	AO2	8271	
	0	3	AO2	8319	
	0	6	AO3		
	0	9	AO3	8271	
	0	6	AOAN		
	0	9	AOAN	8271	
	0	6	AOAN	8319	
	0	3	APOCM	8300	
	0	6	APOCS		
	0	3	APOCS	8251	
	0	12	APO1		
	0	12	APO1	8251	
	0	27	APO2	8251	
	0	3	APO3		
	0	3	AT1	8262	
	0	6	AT2	8262	
	0	3	AT2	8319	
	0	12	AT3	8262	
	0	12	AT3	8819	

II.A.1.b. BILLETS REQUIRED FOR OPERATIONAL AND FLEET SUPPORT ACTIVITIES

ACTIVITY, UIC, PHASING INCREMENT	BILLETS OFF	BILLETS ENL	DESIG/ RATING	PNEC/ PMOS	SNEC/ SMOS
SELRES	0	3	ATAN	6605	6606
	0	3	ATAN	8819	
	0	3	AWCS	7841	
	0	3	AWC	7861	
	0	6	AW1	7841	
	0	6	AW1	7861	
	0	21	AW2	7841	
	0	9	AW2	7861	
	0	21	AW3	7841	
	0	9	AW3	7861	
	0	15	AWAN	7841	
	0	6	AWAN	7861	
	0	3	AZ3		
	0	3	AZAN		
	0	3	DK3		
	0	3	HM3	8406	
	0	3	IS1		
	0	6	ISSN		
	0	3	IT1	2781	
	0	6	MS2		
	0	3	MS3		
	0	9	MSSN		
	0	3	PH2	8143	
	0	3	PH2	8288	
	0	3	PH3	8133	
	0	3	PN1		
	0	6	PN3		
	0	15	PO2	6718	
	0	3	PO3		
	0	6	YNSN		
	0	60	AN		
ACTIVITY TOTAL:	225	867			
FLEET SUPPORT ACTIVITIES - USN					
AIMD NAS Brunswick, 44314					
ACDU	4	0	1520		
	1	0	6330		
	1	0	6380		
	2	0	7340		
	0	1	ADCS		
	0	1	ADC	6418	
	0	1	ADC	6422	
	0	8	AD1	6419	6426
	0	13	AD2	6418	
	0	3	AD2	6422	
	0	11	AD3	6418	

II.A.1.b. BILLETS REQUIRED FOR OPERATIONAL AND FLEET SUPPORT ACTIVITIES

ACTIVITY, UIC, PHASING INCREMENT	BILLETS OFF	BILLETS ENL	DESIG/ RATING	PNEC/ PMOS	SNEC/ SMOS
ACDU	0	9	ADAN	6418	
	0	1	AEC		
	0	2	AE1		
	0	1	AE1	7137	
	0	1	AE1	7175	7136
	0	4	AE2		
	0	1	AE2	7136	
	0	1	AE2	7137	
	0	1	AE2	7137	9526
	0	3	AE2	7175	
	0	1	AE2		9526
	0	3	AE3		
	0	1	AE3	7105	
	0	1	AE3	7136	
	0	2	AE3	7137	
	0	1	AE3	7137	9527
	0	2	AEAN		
	0	1	AK1	8012	
	0	4	AK2		
	0	1	AK2		9590
	0	1	AK2		9595
	0	3	AK3		
	0	1	AMCS		
	0	1	AMC		
	0	1	AMC	7232	
	0	2	AM1	7225	
	0	3	AM1	7226	
	0	1	AM1	7232	
	0	1	AM1		9595
	0	2	AM2	7222	
	0	2	AM2	7225	
	0	3	AM2	7226	
	0	3	AM2	7232	
	0	3	AM3		
	0	2	AM3	7222	
	0	3	AM3	7226	
	0	5	AM3	7232	
	0	1	AMAN		
	0	1	AOC		
	0	2	AO1	6802	
	0	3	AO2	6802	
	0	5	AO3	6802	
	0	1	APOCM	8300	
	0	2	APOCS		
	0	2	APOC		
	0	1	APO1		
	0	1	APO2		
	0	1	APO2	8201	

II.A.1.b. BILLETS REQUIRED FOR OPERATIONAL AND FLEET SUPPORT ACTIVITIES

ACTIVITY, UIC, PHASING INCREMENT	BILLETS OFF	BILLETS ENL	DESIG/ RATING	PNEC/ PMOS	SNEC/ SMOS
ACDU	0	1	ASCS	7609	
	0	2	ASC	7609	
	0	1	AS1	7609	
	0	1	AS1	7609	7607
	0	1	AS1	7609	7612
	0	1	AS1	7609	7614
	0	1	AS1	7614	
	0	1	AS1		9502
	0	1	AS2	7222	
	0	1	AS2	7607	7614
	0	1	AS2	7609	7607
	0	1	AS2	7612	
	0	1	AS2	7614	
	0	1	AS2	7614	7603
	0	1	AS2	7614	7607
	0	1	AS2	7614	7612
	0	1	AS2	7614	9527
	0	1	AS2		9502
	0	1	AS2		9595
	0	1	AS3	7222	
	0	1	AS3	7601	
	0	1	AS3	7603	
	0	1	AS3	7606	7607
	0	2	AS3	7607	
	0	1	AS3	7607	6712
	0	1	AS3	7607	7601
	0	2	AS3	7607	7606
	0	1	AS3	7612	
	0	3	AS3	7614	
	0	1	AS3	7614	7603
	0	1	ASAN	7606	7614
	0	3	ASAN	7607	
	0	3	ASAN	7612	
	0	2	ASAN	7614	
	0	1	ATCS		
	0	3	ATC		
	0	1	AT1	6529	
	0	1	AT1	6634	
	0	1	AT1	6664	
	0	1	AT1	6705	
	0	1	AT1	6710	
	0	1	AT1	6717	
	0	1	AT1	6718	
	0	1	AT1	6721	
	0	1	AT1	8319	
	0	1	AT1		9503
	0	1	AT1		9526
	0	1	AT2	6529	

II.A.1.b. BILLETS REQUIRED FOR OPERATIONAL AND FLEET SUPPORT ACTIVITIES

ACTIVITY, UIC, PHASING INCREMENT	BILLETS OFF	BILLETS ENL	DESIG/ RATING	PNEC/ PMOS	SNEC/ SMOS
ACDU	0	1	AT2	6534	
	0	1	AT2	6606	
	0	1	AT2	6612	
	0	2	AT2	6664	
	0	1	AT2	6673	
	0	1	AT2	6704	
	0	2	AT2	6716	
	0	2	AT2	6717	
	0	1	AT2	6717	6609
	0	3	AT2	6718	
	0	2	AT2	6721	
	0	1	AT2	8319	
	0	2	AT3		
	0	1	AT3	6529	
	0	1	AT3	6606	
	0	1	AT3	6606	6605
	0	2	AT3	6609	
	0	1	AT3	6612	
	0	2	AT3	6634	6529
	0	1	AT3	6664	
	0	4	AT3	6673	
	0	1	AT3	6704	
	0	1	AT3	6710	
	0	1	AT3	6710	6612
	0	1	AT3	6717	
	0	1	AT3		9527
	0	1	ATAN	6612	6710
	0	1	ATAN	6673	
	0	2	AZC		
	0	3	AZ1		
	0	1	AZ1	6314	
	0	4	AZ2		
	0	1	AZ2	6314	
	0	5	AZ3		
	0	1	MR1	4402	
	0	1	MR3		
	0	1	PRC		
	0	3	PR1		
	0	1	PR1	7356	
	0	3	PR2		
	0	1	PR2	7356	
	0	2	PR3		
	0	1	PR3	7356	
	0	1	SKC	8012	
	0	1	YN2		
ACTIVITY TOTAL:	8	268			

II.A.1.b. BILLETS REQUIRED FOR OPERATIONAL AND FLEET SUPPORT ACTIVITIES

ACTIVITY, UIC, PHASING INCREMENT	BILLETS OFF	BILLETS ENL	DESIG/ RATING	PNEC/ PMOS	SNEC/ SMOS
AIMD NAS Jacksonville, 44319					
ACDU	4	0	1520		
	1	0	6330		
	1	0	6380		
	1	0	7340		
	1	0	7360		
	1	0	7380		
	0	1	ADCS		
	0	4	ADC		
	0	1	ADC	6418	
	0	1	ADC	6421	
	0	1	ADC	6422	
	0	2	AD1		
	0	10	AD1	6419	6426
	0	4	AD1	6421	
	0	3	AD1	6422	
	0	1	AD1	6426	
	0	1	AD1	8312	
	0	1	AD2		
	0	19	AD2	6418	
	0	5	AD2	6421	
	0	4	AD2	6422	
	0	1	AD2	8312	
	0	1	AD3		
	0	22	AD3	6418	
	0	10	AD3	6421	
	0	4	AD3	6422	
	0	1	AD3	8312	
	0	1	AECS		
	0	3	AEC		
	0	1	AE1	7131	
	0	1	AE1	7137	
	0	1	AE1	7144	
	0	1	AE1	7175	
	0	1	AE1	7197	
	0	1	AE1		9588
	0	3	AE2		
	0	1	AE2	7131	
	0	2	AE2	7136	
	0	4	AE2	7137	
	0	2	AE2	7175	
	0	2	AE2	7197	
	0	1	AE2	8312	
	0	2	AE2		9526
	0	2	AE3		
	0	1	AE3	7105	
	0	5	AE3	7131	
	0	4	AE3	7137	

II.A.1.b. BILLETS REQUIRED FOR OPERATIONAL AND FLEET SUPPORT ACTIVITIES

ACTIVITY, UIC, PHASING INCREMENT	BILLETS OFF	BILLETS ENL	DESIG/ RATING	PNEC/ PMOS	SNEC/ SMOS
ACDU	0	3	AE3	7144	
	0	3	AE3	7175	
	0	2	AE3	7197	
	0	1	AE3	8312	
	0	1	AE3		9527
	0	2	AEAN		
	0	2	AEAN	7131	
	0	1	AEAN	7144	
	0	1	AFCM		
	0	1	AFCM	8300	
	0	2	AK1		
	0	2	AK1	8012	
	0	5	AK2		
	0	2	AK2		9590
	0	1	AK3		
	0	2	AMCS		
	0	1	AMC	7212	
	0	1	AMC	7232	
	0	1	AM1		
	0	2	AM1	7212	
	0	1	AM1	7222	
	0	2	AM1	7225	
	0	2	AM1	7232	
	0	1	AM1		9595
	0	1	AM2		
	0	2	AM2	7213	
	0	2	AM2	7222	
	0	2	AM2	7225	
	0	3	AM2	7232	
	0	2	AM3		
	0	5	AM3	7213	
	0	1	AM3	7222	
	0	1	AM3	7225	
	0	7	AM3	7232	
	0	1	AM3	8312	
	0	2	AO1	6802	
	0	2	AO2	6802	
	0	3	AO3	6802	
	0	1	AOAN	6802	
	0	2	APOCM		
	0	1	APOCS		
	0	1	APOC		
	0	1	APO1		9588
	0	1	APO2	8201	
	0	3	APO3		
	0	1	ASCS	7609	
	0	2	ASC	7609	
	0	1	AS1		

II.A.1.b. BILLETS REQUIRED FOR OPERATIONAL AND FLEET SUPPORT ACTIVITIES

ACTIVITY, UIC, PHASING INCREMENT	BILLETS OFF	BILLETS ENL	DESIG/ RATING	PNEC/ PMOS	SNEC/ SMOS
ACDU	0	1	AS1	7601	
	0	9	AS1	7609	7612
	0	1	AS1		9502
	0	1	AS1		9590
	0	2	AS2		
	0	1	AS2	7601	
	0	3	AS2	7603	
	0	2	AS2	7606	
	0	3	AS2	7607	
	0	2	AS2	7609	
	0	1	AS2	7610	
	0	1	AS2	7612	
	0	1	AS2	7612	7222
	0	1	AS2	7613	7616
	0	4	AS2	7614	
	0	1	AS2	7614	7607
	0	2	AS2	7616	
	0	2	AS2		9502
	0	3	AS3		
	0	1	AS3	7601	
	0	2	AS3	7603	
	0	4	AS3	7606	
	0	4	AS3	7607	
	0	1	AS3	7610	
	0	2	AS3	7612	
	0	1	AS3	7612	7222
	0	3	AS3	7614	
	0	1	AS3	7616	
	0	2	ASAN		
	0	1	ASAN	7601	
	0	1	ASAN	7603	
	0	2	ASAN	7606	
	0	4	ASAN	7607	
	0	2	ASAN	7612	
	0	2	ASAN	7614	
	0	2	ATCS		
	0	7	ATC		
	0	2	AT1		
	0	1	AT1	6526	
	0	1	AT1	6527	
	0	1	AT1	6534	9503
	0	1	AT1	6609	
	0	2	AT1	6611	
	0	1	AT1	6612	
	0	1	AT1	6614	
	0	1	AT1	6628	
	0	1	AT1	6635	
	0	2	AT1	6664	

II.A.1.b. BILLETS REQUIRED FOR OPERATIONAL AND FLEET SUPPORT ACTIVITIES

ACTIVITY, UIC, PHASING INCREMENT	BILLETS OFF	BILLETS ENL	DESIG/ RATING	PNEC/ PMOS	SNEC/ SMOS
ACDU	0	1	AT1	6686	
	0	1	AT1	6701	
	0	1	AT1	6704	
	0	1	AT1	6705	
	0	1	AT1	6710	
	0	1	AT1	6713	
	0	1	AT1	6717	
	0	2	AT1	6721	
	0	1	AT1		9503
	0	1	AT1		9590
	0	2	AT2		
	0	1	AT2	6526	
	0	1	AT2	6527	
	0	1	AT2	6529	
	0	1	AT2	6605	9527
	0	1	AT2	6609	
	0	1	AT2	6609	9527
	0	3	AT2	6611	
	0	1	AT2	6612	
	0	1	AT2	6614	
	0	1	AT2	6615	
	0	2	AT2	6629	
	0	1	AT2	6634	
	0	1	AT2	6634	6635
	0	1	AT2	6639	
	0	1	AT2	6664	
	0	1	AT2	6673	
	0	2	AT2	6684	
	0	2	AT2	6686	
	0	1	AT2	6689	
	0	9	AT2	6704	
	0	2	AT2	6705	9527
	0	2	AT2	6710	
	0	1	AT2	6713	
	0	2	AT2	6716	
	0	3	AT2	6717	
	0	1	AT2	6718	
	0	3	AT2	6721	
	0	1	AT2	6721	9527
	0	1	AT2		9526
	0	1	AT3		
	0	2	AT3	6526	
	0	1	AT3	6526	9527
	0	1	AT3	6527	
	0	1	AT3	6527	9527
	0	1	AT3	6534	9527
	0	1	AT3	6605	9527
	0	1	AT3	6606	

II.A.1.b. BILLETS REQUIRED FOR OPERATIONAL AND FLEET SUPPORT ACTIVITIES

ACTIVITY, UIC, PHASING INCREMENT	BILLETS OFF	BILLETS ENL	DESIG/ RATING	PNEC/ PMOS	SNEC/ SMOS
ACDU	0	6	AT3	6609	
	0	1	AT3	6611	9527
	0	1	AT3	6612	
	0	2	AT3	6614	
	0	1	AT3	6615	
	0	4	AT3	6619	
	0	2	AT3	6634	
	0	1	AT3	6634	9527
	0	1	AT3	6639	
	0	1	AT3	6664	
	0	2	AT3	6673	
	0	3	AT3	6686	
	0	2	AT3	6688	
	0	13	AT3	6704	
	0	3	AT3	6710	
	0	1	AT3	6713	
	0	1	AT3	6715	
	0	2	AT3	6716	9527
	0	13	AT3	6717	
	0	2	AT3	6717	9527
	0	1	AT3		9527
	0	1	ATAN		
	0	1	ATAN	6527	
	0	1	ATAN	6606	
	0	1	ATAN	6609	
	0	3	ATAN	6611	
	0	1	ATAN	6612	
	0	1	ATAN	6614	
	0	1	ATAN	6673	
	0	1	ATAN	6686	
	0	4	ATAN	6704	
	0	3	ATAN	6710	
	0	1	ATAN	6715	
	0	2	ATAN	6716	
	0	5	ATAN	6717	
	0	1	AVCM		
	0	2	AZC		
	0	1	AZC	6314	
	0	5	AZ1		
	0	1	AZ1	6314	
	0	13	AZ2		
	0	1	AZ2	6314	
	0	18	AZ3		
	0	1	AZAN		
	0	1	ET2	1677	
	0	1	ET3	1677	
	0	1	FC3	1677	
	0	1	MR1		

II.A.1.b. BILLETS REQUIRED FOR OPERATIONAL AND FLEET SUPPORT ACTIVITIES

ACTIVITY, UIC, PHASING INCREMENT	BILLETS OFF	BILLETS ENL	DESIG/ RATING	PNEC/ PMOS	SNEC/ SMOS
ACDU	0	1	MR3		
	0	1	NC1		
	0	1	PRCS		
	0	1	PRC		
	0	4	PR1		
	0	1	PR1	7356	
	0	5	PR2		
	0	2	PR2	7356	
	0	6	PR3		
	0	3	PR3	7356	
	0	1	SKCS		
	0	1	YN2		
SELRES	0	1	AD3		
	0	1	AE3		
	0	1	AM2		
	0	1	AS2		
	0	1	AZ2		
	0	1	AZ3		
	0	1	PR2		
	0	1	PR3		
ACTIVITY TOTAL:	9	565			
AIMD NAS Sigonella, 44330					
ACDU	3	0	1520		
	2	0	6330		
	1	0	6380		
	2	0	7340		
	1	0	7380		
	0	2	ADCS		
	0	2	ADC		
	0	1	ADC	6418	
	0	1	ADC	6422	
	0	5	AD1	6418	
	0	4	AD1	6422	
	0	2	AD1	6423	
	0	1	AD2		
	0	2	AD2	6403	
	0	9	AD2	6418	
	0	4	AD2	6422	
	0	6	AD2	6423	
	0	10	AD3	6418	
	0	3	AD3	6423	
	0	2	ADAN		
	0	7	ADAN	6418	
	0	3	ADAN	6423	
	0	3	AEC		

II.A.1.b. BILLETS REQUIRED FOR OPERATIONAL AND FLEET SUPPORT ACTIVITIES

ACTIVITY, UIC, PHASING INCREMENT	BILLETS OFF	BILLETS ENL	DESIG/ RATING	PNEC/ PMOS	SNEC/ SMOS
ACDU	0	1	AE1	7136	
	0	2	AE1	7137	
	0	1	AE2	7136	
	0	1	AE2	7137	
	0	1	AE2		9527
	0	1	AE3		
	0	2	AE3	7136	
	0	1	AE3	7137	
	0	2	AEAN		
	0	1	AEAN	7137	
	0	1	AFCM	8300	
	0	2	AK1	8012	
	0	2	AK2		
	0	2	AK2	8012	
	0	3	AK3		
	0	1	AKAN		
	0	1	AMCS		
	0	1	AMC	7212	
	0	1	AMC	7225	
	0	1	AM1	7212	
	0	2	AM1	7225	
	0	1	AM1	7226	
	0	4	AM1	7232	
	0	1	AM2		
	0	1	AM2	7212	
	0	3	AM2	7222	
	0	2	AM2	7225	
	0	2	AM2	7226	
	0	2	AM2	7232	
	0	1	AM3	7212	
	0	2	AM3	7222	
	0	1	AM3	7226	
	0	3	AM3	7232	
	0	5	AMAN		
	0	2	AMAN	7212	
	0	3	AMAN	7232	
	0	2	AO1	6802	
	0	1	AO2	6802	
	0	1	AO3	6802	
	0	1	ASCS	7609	
	0	2	ASC	7609	
	0	1	AS1	7601	
	0	1	AS1	7606	
	0	4	AS1	7609	
	0	1	AS1	7612	
	0	1	AS1	7614	
	0	2	AS1		9502
	0	2	AS2	7222	

II.A.1.b. BILLETS REQUIRED FOR OPERATIONAL AND FLEET SUPPORT ACTIVITIES

ACTIVITY, UIC, PHASING INCREMENT	BILLETS OFF	BILLETS ENL	DESIG/ RATING	PNEC/ PMOS	SNEC/ SMOS
ACDU	0	1	AS2	7601	
	0	1	AS2	7603	
	0	3	AS2	7606	
	0	2	AS2	7607	
	0	4	AS2	7612	
	0	7	AS2	7614	
	0	2	AS2	7616	
	0	1	AS3		
	0	2	AS3	7601	
	0	3	AS3	7603	
	0	3	AS3	7606	
	0	2	AS3	7607	
	0	2	AS3	7612	
	0	3	AS3	7614	
	0	15	ASAN		
	0	1	ASAN	7603	
	0	2	ATCS		
	0	6	ATC		
	0	1	AT1		
	0	1	AT1	6526	
	0	1	AT1	6612	
	0	1	AT1	6615	
	0	1	AT1	6634	
	0	1	AT1	6673	
	0	1	AT1	6689	
	0	1	AT1	6695	
	0	1	AT1	6718	
	0	1	AT1	6721	
	0	2	AT1		9503
	0	1	AT1		9526
	0	1	AT2	6526	
	0	3	AT2	6611	
	0	1	AT2	6613	
	0	1	AT2	6633	
	0	1	AT2	6664	
	0	2	AT2	6673	
	0	2	AT2	6688	
	0	1	AT2	6689	
	0	2	AT2	6694	
	0	1	AT2	6705	
	0	1	AT2	6716	
	0	2	AT2	6717	
	0	3	AT2	6718	
	0	2	AT2	6721	
	0	1	AT2		9526
	0	1	AT3	6529	
	0	1	AT3	6534	
	0	1	AT3	6605	

II.A.1.b. BILLETS REQUIRED FOR OPERATIONAL AND FLEET SUPPORT ACTIVITIES

ACTIVITY, UIC, PHASING INCREMENT	BILLETS OFF	BILLETS ENL	DESIG/ RATING	PNEC/ PMOS	SNEC/ SMOS
ACDU	0	2	AT3	6609	
	0	1	AT3	6611	
	0	2	AT3	6612	
	0	2	AT3	6613	
	0	1	AT3	6615	
	0	2	AT3	6618	
	0	2	AT3	6633	
	0	1	AT3	6634	
	0	2	AT3	6664	
	0	2	AT3	6673	
	0	1	AT3	6688	
	0	1	AT3	6704	
	0	3	AT3	6716	
	0	1	AT3	6717	
	0	1	AT3		9526
	0	1	AT3		9527
	0	1	ATAN	6605	
	0	1	ATAN	6609	
	0	1	ATAN	6611	
	0	2	ATAN	6613	
	0	1	ATAN	6634	
	0	2	ATAN	6673	
	0	1	ATAN	6717	
	0	1	AVCM		
	0	1	AZC		
	0	2	AZ1		
	0	2	AZ1	6314	
	0	9	AZ2		
	0	3	AZ2	6314	
	0	8	AZ3		
	0	3	AZAN		
	0	1	MMC		
	0	1	MM1	4201	
	0	3	MM2	4201	
	0	4	MM3	4201	
	0	1	MR1		
	0	1	MR2		
	0	1	MR3		
	0	1	PRC		
	0	2	PR1		
	0	1	PR1	7356	
	0	2	PR2	7356	
	0	3	PR3		
	0	4	PRAN		
	0	2	SKC	8012	
SELRES	0	6	AD2		
	0	1	AD3		

II.A.1.b. BILLETS REQUIRED FOR OPERATIONAL AND FLEET SUPPORT ACTIVITIES

ACTIVITY, UIC, PHASING INCREMENT	BILLETS OFF	BILLETS ENL	DESIG/ RATING	PNEC/ PMOS	SNEC/ SMOS
SELRES	0	3	AE2		
	0	2	AM2		
	0	3	AM3		
	0	1	ASC		
	0	1	AS1		
	0	2	AS2		
	0	5	AS3		
	0	4	AT2		
	0	1	AT2	6529	
	0	6	AT3		
	0	2	PR2		
	0	1	SKC		
ACTIVITY TOTAL:	9	377			
AIMD NS Roosevelt Roads, 44373					
ACDU	4	0	1520		
	1	0	6380		
	1	0	7340		
	0	2	ADC		
	0	1	AD1	6403	6418
	0	1	AD1	6418	
	0	1	AD1	6518	6403
	0	1	AD2	6418	
	0	1	AD2	6419	
	0	1	AD3	6416	
	0	1	AD3	6419	
	0	2	ADAN	6418	
	0	1	AEC		
	0	1	AE1	7131	
	0	1	AE1	7175	
	0	1	AE1	7175	7131
	0	1	AE2	7105	
	0	1	AE2	7137	9527
	0	1	AE2	7175	
	0	1	AE3	7105	
	0	1	AE3	7136	
	0	1	AE3	7137	
	0	1	AE3	7137	9527
	0	2	AE3	7144	
	0	1	AE3	7175	
	0	1	AFCM	8300	
	0	1	AK1		
	0	1	AK1	8012	
	0	1	AK2		
	0	1	AK2	8012	9595
	0	1	AK2		9590
	0	5	AK3		

II.A.1.b. BILLETS REQUIRED FOR OPERATIONAL AND FLEET SUPPORT ACTIVITIES

ACTIVITY, UIC, PHASING INCREMENT	BILLETS OFF	BILLETS ENL	DESIG/ RATING	PNEC/ PMOS	SNEC/ SMOS
ACDU	0	1	AMC	7232	
	0	1	AM1	7222	7232
	0	1	AM1	7225	
	0	1	AM1	7226	
	0	1	AM1	7227	
	0	2	AM2	7222	7232
	0	1	AM2	7225	7232
	0	1	AM2	7226	
	0	1	AM2	7227	
	0	1	AM2	7232	7222
	0	1	AM3	7225	7232
	0	1	AM3	7227	
	0	2	AM3	7232	
	0	1	AMAN	7226	
	0	2	AO1	6802	
	0	1	AO2	6802	
	0	4	AO3	6802	
	0	1	ASCS	7609	
	0	1	AS1	7607	
	0	2	AS1	7609	
	0	1	AS1	7612	7222
	0	1	AS1	7614	
	0	1	AS1		9502
	0	1	AS1		9590
	0	2	AS2		
	0	1	AS2	7601	
	0	1	AS2	7603	
	0	1	AS2	7606	
	0	1	AS2	7606	7607
	0	1	AS2	7612	
	0	1	AS2	7612	7222
	0	5	AS2	7614	
	0	1	AS2		9590
	0	1	AS3		
	0	2	AS3	7606	
	0	3	AS3	7607	
	0	4	AS3	7612	
	0	3	AS3	7614	
	0	2	ATC		
	0	1	AT1	6611	
	0	1	AT1	6615	
	0	1	AT1	6717	
	0	1	AT1	6717	9526
	0	1	AT1	6721	
	0	1	AT1		9503
	0	1	AT2	6529	
	0	1	AT2	6606	
	0	1	AT2	6612	

II.A.1.b. BILLETS REQUIRED FOR OPERATIONAL AND FLEET SUPPORT ACTIVITIES

ACTIVITY, UIC, PHASING INCREMENT	BILLETS OFF	BILLETS ENL	DESIG/ RATING	PNEC/ PMOS	SNEC/ SMOS
ACDU	0	1	AT2	6615	
	0	2	AT2	6664	
	0	3	AT2	6673	
	0	1	AT2	6710	
	0	2	AT2	6717	
	0	1	AT2	6718	
	0	1	AT2	6721	
	0	1	AT2		9526
	0	1	AT3	6526	
	0	1	AT3	6605	
	0	3	AT3	6609	
	0	2	AT3	6673	
	0	1	AT3	6673	9527
	0	1	AT3	6710	
	0	2	AT3	6717	
	0	1	AT3	6717	9527
	0	1	AT3		9526
	0	1	AT3		9527
	0	1	AZC		
	0	1	AZ1		
	0	1	AZ1	6314	
	0	5	AZ2		
	0	1	AZ2	6314	
	0	5	AZ3		
	0	1	MR2		
	0	2	PR1	7356	
	0	2	PR2	7356	
	0	1	PR3		
	0	1	SKC	8012	
	0	1	YN1		
SELRES	0	1	AD3	6418	
	0	1	AE1	7144	
	0	1	AE2	7105	
	0	1	AE2	7105	7144
	0	1	AE2	7136	
	0	1	AS1	7609	
	0	1	AS2	7614	
	0	1	AS3	7603	
	0	2	ASAN	7603	
	0	1	AT1	6606	
	0	1	AT2	6534	
	0	1	AT2	6612	
	0	1	AT2	6615	
	0	1	AT3	6529	
	0	1	AT3	6717	
	0	1	ATAN	6606	

II.A.1.b. BILLETS REQUIRED FOR OPERATIONAL AND FLEET SUPPORT ACTIVITIES

ACTIVITY, UIC, PHASING INCREMENT	BILLETS OFF	BILLETS ENL	DESIG/ RATING	PNEC/ PMOS	SNEC/ SMOS
ACTIVITY TOTAL:	6	170			
COMPATRECON WING 05, NAS Brunswick, 53823					
ACDU	1	0	1120		
	1	0	1300		
	6	0	1302		
	1	0	1310		
	3	0	1322		
	1	0	1520		
	5	0	1630		
	1	0	2102		
	1	0	6320		
	1	0	6460		
	1	0	7340		
	0	1	ADCS	8251	
	0	1	ADC	8319	9502
	0	1	AEC	8319	
	0	1	AK2		
	0	2	AMC	8319	
	0	1	AMEC	8319	
	0	3	AOC	8319	
	0	1	AO1	8319	0812
	0	1	APOCM		9580
	0	1	ATC	8319	
	0	1	ATC	9402	
	0	1	AT1		9502
	0	1	AVCM	8300	
	0	2	AWC	7836	7841
	0	1	AWC	7841	
	0	2	AW1	7835	7841
	0	2	AW1	7835	7861
	0	1	AW2	7835	7841
	0	1	AW2	7835	7861
	0	1	AZC	6315	
	0	1	AZ1	6315	
	0	1	AZ2		
	0	1	ET2	2750	
	0	6	IS1	3924	
	0	2	IS2		
	0	1	IT1	2735	
	0	1	NCC		
	0	1	PH1	8288	
	0	1	SKC		
	0	1	YNC		
	0	1	YN2		
	0	2	YN3		
	0	1	YNSN		

II.A.1.b. BILLETS REQUIRED FOR OPERATIONAL AND FLEET SUPPORT ACTIVITIES

ACTIVITY, UIC, PHASING INCREMENT	BILLETS OFF	BILLETS ENL	DESIG/ RATING	PNEC/ PMOS	SNEC/ SMOS
SELRES	1	0	1630		
COMPATRECON WING 05, NAS Brunswick, 53823, FY02 Increment					
ACDU	2	0	1630		
ACTIVITY TOTAL:	25	46			
COMPATRECON WING 11, NAS Jacksonville, 09461					
ACDU	7	0	1302		
	2	0	1520		
	2	0	1630		
	1	0	2302		
	1	0	7340		
	0	1	ADCS	8251	
	0	1	AECS		
	0	1	AE1	8319	9502
	0	1	AK2	8012	9590
	0	1	AMC	8319	
	0	1	AMC	8319	9502
	0	1	AMEC	8319	
	0	1	AOC	8319	
	0	1	AO1	8319	0812
	0	1	APOCM	8300	
	0	1	APOCM		9580
	0	1	ATC	8262	9402
	0	1	ATC	8319	
	0	1	AT1	8319	9502
	0	1	AWC	7836	7841
	0	1	AWC	7841	
	0	1	AW1	7835	7841
	0	1	AW1	7835	7861
	0	1	AW2	7835	7841
	0	1	AW2	7835	7861
	0	1	AZC		
	0	1	AZ1	6314	
	0	1	CTAC	9190	
	0	1	ET2	1613	2750
	0	1	IS1	3910	3924
	0	1	IS1	3924	
	0	1	IT1	2735	
	0	1	NCC		
	0	1	PH1	8288	
	0	1	SKC	8012	
	0	1	YNC		
	0	1	YN2		
	0	2	YN3		
SELRES	7	0	1302		

II.A.1.b. BILLETS REQUIRED FOR OPERATIONAL AND FLEET SUPPORT ACTIVITIES

ACTIVITY, UIC, PHASING INCREMENT	BILLETS OFF	BILLETS ENL	DESIG/ RATING	PNEC/ PMOS	SNEC/ SMOS
SELRES	5	0	1320		
	1	0	1520		
	1	0	1630		
	0	1	YNC		
	0	1	YN1		
	0	1	YN2		
ACTIVITY TOTAL:	27	37			
FLT MARITIME PATROL MOCC JAX, 55620					
ACDU	0	1	AT1	9402	
ACTIVITY TOTAL:	0	1			
FLT MARITIME PATROL MOCC MED, 55637					
ACDU	0	1	AT1	9402	8263
ACTIVITY TOTAL:	0	1			
NAWC ACDIV PAX RIVER, 49860					
ACDU	0	1	AT2	9402	
ACTIVITY TOTAL:	0	1			
NRL FLTSUPPDET, NAS Patuxent River, 31686					
ACDU	5	0	1311		
	1	0	1321		
	1	0	6330		
	0	2	ADC	8319	
	0	1	AD1	8241	
	0	4	AD1	8319	
	0	2	AD2	8241	
	0	2	AD2	8251	8319
	0	2	AD2	8319	
	0	1	AD3	8241	8819
	0	3	AD3	8819	
	0	3	ADAN	8819	
	0	1	AEC	8251	7182
	0	1	AE1	8241	7182
	0	1	AE1	8251	7182
	0	1	AE1	8319	
	0	1	AE2	8241	7182
	0	2	AE2	8251	7182
	0	1	AEAN	7182	
	0	1	AFCM		
	0	1	AK1		
	0	1	AMC		
	0	2	AM1	8251	8319

II.A.1.b. BILLETS REQUIRED FOR OPERATIONAL AND FLEET SUPPORT ACTIVITIES

ACTIVITY, UIC, PHASING INCREMENT	BILLETS OFF	BILLETS ENL	DESIG/ RATING	PNEC/ PMOS	SNEC/ SMOS
ACDU	0	3	AM1	8319	
	0	2	AM2		
	0	1	AM2	8241	
	0	1	AM2	8251	8319
	0	5	AM2	8319	
	0	2	AM3	8819	
	0	1	AMAN	8819	
	0	1	AME1	8319	
	0	1	AME2	8319	
	0	1	AO2	8319	
	0	1	AOAN		
	0	3	AT1		
	0	2	AT1	8265	
	0	2	AT2	6582	
	0	1	AT2	8265	
	0	1	AT2	8319	
	0	1	AT3	8265	
	0	1	AZ1		
	0	1	AZ2		
	0	2	PR2		
ACTIVITY TOTAL:	7	66			
Reserve Patrol Wing (Atlantic), NAS Willow Grove, 09158					
TAR	6	0	1302		
	1	0	1320		
	1	0	1520		
	0	1	ADC	8251	8319
	0	1	AEC	8319	
	0	1	AK2		
	0	1	AMC		
	0	1	AMC	8319	
	0	1	AMEC	8319	
	0	1	AOCS	8271	
	0	1	APOCM	8300	
	0	1	APOCM		9580
	0	1	ATCS	8263	
	0	1	ATC		
	0	1	AWCS	7821	
	0	1	AWC	7861	
	0	1	AW1	7821	
	0	2	AW2	7861	
	0	1	AZC	6315	
	0	1	AZ2		
	0	1	IT2	2750	
	0	1	NC1		
	0	1	PNC		
	0	1	PN1		

II.A.1.b. BILLETS REQUIRED FOR OPERATIONAL AND FLEET SUPPORT ACTIVITIES

ACTIVITY, UIC, PHASING INCREMENT	BILLETS OFF	BILLETS ENL	DESIG/ RATING	PNEC/ PMOS	SNEC/ SMOS
TAR	0	1	PN2		
	0	1	SKC		
	0	1	YNC		
	0	1	YN1		
	0	1	YN2		
	0	1	YN3		
	0	1	YNSN		
SELRES	2	0	1000		
	4	0	1302		
	2	0	1310		
	1	0	1630		
	1	0	2100		
	1	0	7340		
	0	1	AK2		
	0	1	AZ1	6315	
	0	2	IS1	3924	
	0	2	YN2		
ACTIVITY TOTAL:	19	35			
VP-30 FMS, NAS Jacksonville, 42335					
ACDU	3	0	1312		
	2	0	1322		
	0	2	APO1	8251	9502
	0	1	AT2	9402	9502
	0	1	AWC	7841	9502
	0	2	AW2	7841	9502
	0	1	AW2	7861	9502
	0	1	YN2		
ACTIVITY TOTAL:	5	8			
VPU-1, NAS Brunswick, 53869					
ACDU	2	0	1301		
	13	0	1311		
	12	0	1321		
	1	0	1630		
	1	0	6380		
	0	1	ADC	8319	
	0	2	AD1	8319	
	0	3	AD2	8319	
	0	4	AD3	8819	
	0	4	ADAN	8819	
	0	2	AE1	8319	
	0	2	AE2	8319	
	0	3	AE3	8319	
	0	4	AEAN	8819	

II.A.1.b. BILLETS REQUIRED FOR OPERATIONAL AND FLEET SUPPORT ACTIVITIES

ACTIVITY, UIC, PHASING INCREMENT	BILLETS OFF	BILLETS ENL	DESIG/ RATING	PNEC/ PMOS	SNEC/ SMOS
ACDU	0	1	AK1		
	0	2	AK2		
	0	1	AK3		
	0	1	AKAN		
	0	1	AMC	8319	
	0	3	AM1	8319	
	0	3	AM2	8319	
	0	5	AM3	8819	
	0	4	AMAN	8819	
	0	1	AME1	8319	
	0	1	AME2	8319	
	0	1	AME3	8319	
	0	1	AMEAN	8319	
	0	1	AO1	8319	0812
	0	1	APOCM	8300	
	0	2	APOCS		
	0	2	APOCS	8800	
	0	1	APOC	8251	
	0	2	APOC	8319	8800
	0	3	APO1		
	0	1	APO1	8251	
	0	1	APO1		9595
	0	4	APO2		
	0	7	APO2	8251	
	0	1	ATCS		
	0	1	ATC	6635	
	0	2	ATC	8262	
	0	1	ATC	8284	
	0	1	ATC	8319	
	0	1	AT1	6635	9526
	0	3	AT1	8262	
	0	3	AT1	8284	
	0	2	AT1	8319	
	0	1	AT1	9402	
	0	1	AT2	6618	9527
	0	2	AT2	6631	
	0	1	AT2	6635	9527
	0	9	AT2	8262	
	0	9	AT2	8284	
	0	1	AT2	8319	
	0	2	AT2	9402	
	0	1	AT3	6634	
	0	3	AT3	8284	
	0	3	AT3	8819	
	0	2	AT3	9402	
	0	5	ATAN	8819	
	0	1	AW1	7821	
	0	1	AW2	7841	

II.A.1.b. BILLETS REQUIRED FOR OPERATIONAL AND FLEET SUPPORT ACTIVITIES

ACTIVITY, UIC, PHASING INCREMENT	BILLETS OFF	BILLETS ENL	DESIG/ RATING	PNEC/ PMOS	SNEC/ SMOS
ACDU	0	1	AW3	7841	
	0	1	AWAN	7841	
	0	1	AZ1		
	0	2	AZ2		
	0	1	AZ2	6303	
	0	1	AZ3		
	0	1	AZAN		
	0	1	DK2		
	0	1	ET2	1677	
	0	1	HM2	8406	
	0	1	ISC	3910	
	0	1	IS3		
	0	1	IT1	2735	
	0	2	IT2	2735	
	0	1	IT3		
	0	1	NC1		
	0	1	PH2	8193	
	0	2	PH2	8288	
	0	1	PH3	8288	
	0	1	PHAN	8288	
	0	1	PN1		
	0	1	PN2		
	0	1	PN3		
	0	1	POCM		9580
	0	3	PO2	6718	
	0	1	PO3		
	0	1	PR1		
	0	1	PR2		
	0	1	PRAN		
	0	1	YNC		
	0	1	YN2		
	0	1	YN3		
	0	2	YNSN		
	0	13	AN		
ACTIVITY TOTAL:	29	184			
VX-20, 39785					
ACDU	0	1	ATC	9402	
	0	3	AT1	9402	
	0	6	AT2	9402	
	0	1	AT3	9402	
ACTIVITY TOTAL:	0	11			
AIMD MCBH Kaneohe Bay, 44312					
ACDU	3	0	1520		
	1	0	6330		

II.A.1.b. BILLETS REQUIRED FOR OPERATIONAL AND FLEET SUPPORT ACTIVITIES

ACTIVITY, UIC, PHASING INCREMENT	BILLETS OFF	BILLETS ENL	DESIG/ RATING	PNEC/ PMOS	SNEC/ SMOS
ACDU	1	0	6360		
	1	0	7380		
	0	1	ADCS		
	0	2	ADC		
	0	7	AD1	6419	6426
	0	9	AD2	6418	
	0	1	AD2	6428	
	0	7	AD3	6418	
	0	1	AD3	6428	
	0	2	AEC		
	0	1	AE1	7137	
	0	1	AE1	7175	
	0	2	AE2	7131	
	0	1	AE2	7136	
	0	3	AE2	7137	
	0	1	AE2	7144	
	0	3	AE3		
	0	2	AE3	7131	
	0	1	AE3	7136	
	0	4	AE3	7137	
	0	1	AE3	7175	
	0	1	AK2		
	0	1	AK2	8012	
	0	1	AK3		
	0	2	AMCS		
	0	2	AM1		
	0	1	AM1	7212	
	0	1	AM1	7213	
	0	1	AM1	7225	
	0	3	AM2		
	0	2	AM2	7213	
	0	2	AM2	7222	
	0	2	AM2	7225	
	0	2	AM2	7232	
	0	1	AM2	7232	7222
	0	2	AM2		9595
	0	1	AM3		
	0	1	AM3	7213	
	0	2	AM3	7232	
	0	1	AOC		
	0	2	AO1		
	0	1	AO1	6802	
	0	1	AO1	6802	0812
	0	1	AO1	6810	
	0	6	AO2		
	0	1	AO2	0812	
	0	2	AO2	6802	
	0	1	AO2	6810	

II.A.1.b. BILLETS REQUIRED FOR OPERATIONAL AND FLEET SUPPORT ACTIVITIES

ACTIVITY, UIC, PHASING INCREMENT	BILLETS OFF	BILLETS ENL	DESIG/ RATING	PNEC/ PMOS	SNEC/ SMOS
ACDU	0	3	AO3		
	0	1	APOCM		
	0	1	APOCM	8300	
	0	1	APOCS		
	0	1	APOC		
	0	1	ASC		
	0	1	AS1	7601	
	0	1	AS1	7606	
	0	3	AS1	7609	
	0	1	AS1		9502
	0	1	AS2		
	0	1	AS2	7601	
	0	1	AS2	7603	
	0	1	AS2	7606	
	0	1	AS2	7606	7614
	0	1	AS2	7607	
	0	2	AS2	7612	
	0	5	AS2	7614	
	0	1	AS2		9590
	0	1	AS2		9595
	0	2	AS3		
	0	1	AS3	7603	
	0	1	AS3	7612	
	0	1	AS3	7614	
	0	1	AS3	7616	
	0	2	ATCS		
	0	2	ATC		
	0	1	AT1		
	0	1	AT1	6605	
	0	1	AT1	6609	
	0	1	AT1	6611	
	0	1	AT1	6664	
	0	2	AT1	6718	
	0	1	AT1	6721	
	0	1	AT1		9503
	0	1	AT2		
	0	1	AT2	6529	
	0	1	AT2	6612	6710
	0	1	AT2	6615	
	0	1	AT2	6639	
	0	1	AT2	6673	
	0	1	AT2	6716	
	0	2	AT2	6717	
	0	1	AT2	6718	
	0	1	AT2	6721	
	0	2	AT2		9527
	0	2	AT3		
	0	1	AT3	6611	

II.A.1.b. BILLETS REQUIRED FOR OPERATIONAL AND FLEET SUPPORT ACTIVITIES

ACTIVITY, UIC, PHASING INCREMENT	BILLETS OFF	BILLETS ENL	DESIG/ RATING	PNEC/ PMOS	SNEC/ SMOS
ACDU	0	1	AT3	6634	
	0	5	AT3	6673	
	0	1	AT3	6716	
	0	1	ATAN	6609	6717
	0	1	AZC		
	0	1	AZ1		
	0	1	AZ1	6314	
	0	10	AZ2		
	0	2	AZ3		
	0	1	MM2	4283	
	0	1	MR1	4402	
	0	1	MR2	4402	
	0	1	PO1		9571
	0	1	PRC		
	0	2	PR1		
	0	1	PR1	7356	
	0	3	PR2		
	0	4	PR2	7356	
	0	6	PR3		
	0	1	PR3	7356	
	0	1	SKC		
	0	1	TM2		
	0	1	TM3		
ACTIVITY TOTAL:	6	206			
AIMD NAF Atsugi, 44323					
ACDU	2	0	1520		
	2	0	6330		
	1	0	6380		
	2	0	7340		
	0	5	ADC		
	0	1	AD1	6403	
	0	1	AD1	6415	
	0	1	AD1	6419	6426
	0	3	AD1	6420	
	0	1	AD1	6421	
	0	1	AD1	6422	
	0	2	AD1	6423	
	0	2	AD1	6426	
	0	2	AD1	6426	6419
	0	1	AD1	8312	
	0	2	AD2	6403	
	0	2	AD2	6415	
	0	1	AD2	6416	
	0	6	AD2	6419	
	0	1	AD2	6419	6426
	0	3	AD2	6420	

II.A.1.b. BILLETS REQUIRED FOR OPERATIONAL AND FLEET SUPPORT ACTIVITIES

ACTIVITY, UIC, PHASING INCREMENT	BILLETS OFF	BILLETS ENL	DESIG/ RATING	PNEC/ PMOS	SNEC/ SMOS
ACDU	0	1	AD2	6421	
	0	2	AD2	6422	
	0	2	AD2	6423	
	0	5	AD2	6426	
	0	1	AD2	8312	
	0	1	AD3		
	0	2	AD3	6415	
	0	1	AD3	6416	
	0	1	AD3	6419	
	0	4	AD3	6420	
	0	7	AD3	6426	
	0	1	AD3	6426	6419
	0	1	AD3	8312	
	0	1	AEC		
	0	1	AE1	7144	
	0	1	AE2		
	0	2	AE2	7105	
	0	1	AE2	7137	9527
	0	1	AE2	7144	
	0	1	AE2	7144	9527
	0	1	AE2	7197	
	0	1	AE2	8312	
	0	1	AE3		
	0	2	AE3	7137	
	0	3	AE3	7144	
	0	2	AE3	7197	
	0	1	AK1	8012	
	0	1	AK1		9590
	0	3	AK2		
	0	1	AK2	8012	8013
	0	1	AK2		9590
	0	1	AK2		9595
	0	5	AK3		
	0	1	AMC		
	0	1	AMC	7212	
	0	2	AM1		
	0	1	AM1	7212	
	0	1	AM1	7225	
	0	1	AM1	7232	
	0	3	AM2		
	0	2	AM2	7212	
	0	1	AM2	7222	
	0	1	AM2	7225	
	0	5	AM2	7232	
	0	1	AM2	8312	
	0	1	AM2		9595
	0	6	AM3		
	0	1	AM3	7212	

II.A.1.b. BILLETS REQUIRED FOR OPERATIONAL AND FLEET SUPPORT ACTIVITIES

ACTIVITY, UIC, PHASING INCREMENT	BILLETS OFF	BILLETS ENL	DESIG/ RATING	PNEC/ PMOS	SNEC/ SMOS
ACDU	0	1	AM3	7222	
	0	2	AM3	7225	
	0	7	AM3	7232	
	0	1	AME1		9571
	0	1	AOC	6802	
	0	1	AO1		
	0	1	AO1	6802	
	0	2	AO2	6802	
	0	2	AO3	6802	
	0	1	ASCS	7609	
	0	3	ASC	7609	
	0	2	AS1	7601	
	0	2	AS1	7606	
	0	2	AS1	7609	
	0	1	AS1	7612	
	0	1	AS1	7614	
	0	1	AS1		9502
	0	2	AS2		
	0	1	AS2	7601	
	0	4	AS2	7607	
	0	1	AS2	7607	7612
	0	3	AS2	7612	
	0	2	AS2	7614	
	0	1	AS2		9503
	0	1	AS3	7601	
	0	4	AS3	7606	
	0	3	AS3	7607	
	0	6	AS3	7612	
	0	6	AS3	7614	
	0	2	ATC		
	0	2	AT1	6611	
	0	1	AT1	6633	
	0	1	AT1	6695	
	0	1	AT1	6718	
	0	1	AT1		9503
	0	4	AT2		
	0	1	AT2	6529	
	0	1	AT2	6605	
	0	2	AT2	6609	
	0	1	AT2	6611	
	0	1	AT2	6612	
	0	1	AT2	6633	
	0	1	AT2	6673	
	0	1	AT2	6688	
	0	2	AT2	6689	
	0	1	AT2	6694	
	0	1	AT2	6695	
	0	1	AT2	6705	

II.A.1.b. BILLETS REQUIRED FOR OPERATIONAL AND FLEET SUPPORT ACTIVITIES

ACTIVITY, UIC, PHASING INCREMENT	BILLETS OFF	BILLETS ENL	DESIG/ RATING	PNEC/ PMOS	SNEC/ SMOS
ACDU	0	3	AT2	6718	
	0	1	AT2		9526
	0	1	AT3	6605	
	0	2	AT3	6611	
	0	1	AT3	6612	
	0	2	AT3	6613	
	0	2	AT3	6673	
	0	1	AT3	6688	
	0	1	AT3	6694	9527
	0	2	AT3	6704	
	0	1	AT3		9526
	0	1	AVCM	8300	
	0	1	AZC		
	0	1	AZ1		
	0	1	AZ1	6314	
	0	9	AZ2		
	0	6	AZ3		
	0	1	AZ3	6301	
	0	1	MM1	4283	
	0	2	MM2	4283	
	0	2	MM3	4283	
	0	1	MR2		
	0	1	PRC		
	0	3	PR1		
	0	2	PR1	7356	
	0	4	PR2		
	0	1	PR2	7356	
	0	5	PR3		
	0	1	SKC		
TAR	0	2	AK2		
	0	3	AM2	7212	
SELRES	0	2	AD1		
	0	10	AD2		
	0	8	AD3		
	0	2	AM3		
	0	1	AO1		
	0	5	AO1	6802	
	0	10	AS2		
	0	10	AS3		
	0	9	AT2	6612	
	0	1	AT2	6673	
	0	1	AT2	6688	
	0	1	AT2	6695	
	0	7	AT3	6605	
	0	1	AT3	6673	
	0	1	AT3	6694	

II.A.1.b. BILLETS REQUIRED FOR OPERATIONAL AND FLEET SUPPORT ACTIVITIES

ACTIVITY, UIC, PHASING INCREMENT	BILLETS OFF	BILLETS ENL	DESIG/ RATING	PNEC/ PMOS	SNEC/ SMOS
SELRES	0	3	AZ2		
	0	5	PR2		
ACTIVITY TOTAL:	7	356			
AIMD NAF Diego Garcia, 44337					
ACDU	1	0	1520		
	1	0	7340		
	0	2	AD1	6418	
	0	1	AD2	6418	
	0	2	AE1	7175	
	0	1	AE2	7175	
	0	1	AE2	7175	9526
	0	1	AE3	7136	
	0	1	AE3	7173	
	0	1	AK1		9590
	0	1	AK2		
	0	1	AK2		9595
	0	2	AK3		
	0	1	AMC		
	0	1	AM1	7222	
	0	1	AM1	7225	
	0	1	AM1	7225	9571
	0	1	AM1	7232	
	0	1	AM2	7212	
	0	1	AM2	7222	
	0	1	AM2	7225	
	0	2	AM3	7232	
	0	1	AO1		
	0	1	AO2	6802	
	0	1	APOCM	8300	
	0	2	APOCS		
	0	2	APOC		
	0	1	APO2	6673	9526
	0	1	APO2	6673	9527
	0	1	APO2		9526
	0	1	APO3	6673	9526
	0	1	AS1		
	0	1	AS1		9502
	0	1	ATC		
	0	1	AT1	6615	9503
	0	1	AT1	6664	
	0	1	AT2	6605	
	0	1	AT2	6609	
	0	1	AT2	6610	9502
	0	2	AT2	6615	
	0	1	AT2	6617	9527
	0	1	AT2	6664	

II.A.1.b. BILLETS REQUIRED FOR OPERATIONAL AND FLEET SUPPORT ACTIVITIES

ACTIVITY, UIC, PHASING INCREMENT	BILLETS OFF	BILLETS ENL	DESIG/ RATING	PNEC/ PMOS	SNEC/ SMOS
ACDU	0	2	AT2	6718	9526
	0	1	AT3	6612	
	0	1	AT3	6717	
	0	1	AZ1		
	0	3	AZ2		
	0	1	AZ2	6314	
	0	2	AZ3		
	0	2	PR1		
	0	1	PR2		
SELRES	2	0	1520		
	0	1	AD1		
	0	2	AD1	6418	
	0	2	AD2	6418	
	0	1	AE1		
	0	2	AE2	7175	
	0	2	AK1		9590
	0	3	AK2		9590
	0	1	AM1		
	0	2	AM2	7212	
	0	2	AM2	7222	
	0	2	AM2	7225	
	0	2	AO2		
	0	1	APOC		
	0	1	APO1		
	0	1	AS1		
	0	1	AT1		
	0	2	AT1	6611	
	0	6	AT2	6673	
	0	2	AT2	6718	
	0	3	AT2		9526
	0	1	AZ2		
	0	1	PR1		
	0	4	PR2		
ACTIVITY TOTAL:	4	106			
AIMD NAF Misawa, 44331					
ACDU	2	0	1520		
	2	0	6330		
	1	0	6380		
	0	1	ADCS		
	0	1	ADC	6418	
	0	8	AD1	6418	
	0	1	AD1	6422	
	0	12	AD2	6418	
	0	2	AD2	6422	
	0	12	AD3	6418	

II.A.1.b. BILLETS REQUIRED FOR OPERATIONAL AND FLEET SUPPORT ACTIVITIES

ACTIVITY, UIC, PHASING INCREMENT	BILLETS OFF	BILLETS ENL	DESIG/ RATING	PNEC/ PMOS	SNEC/ SMOS
ACDU	0	1	AD3	6422	
	0	1	AEC		
	0	1	AE1	6701	
	0	1	AE1	7175	9526
	0	1	AE2		
	0	3	AE2	7131	
	0	1	AE2	7175	
	0	1	AE2	7197	9527
	0	1	AE2	7232	9595
	0	1	AE3		
	0	1	AK1		
	0	2	AK1	8012	
	0	2	AK2		
	0	1	AK2		9595
	0	3	AK3		
	0	1	AMC		
	0	1	AM1	7212	9571
	0	1	AM1	7225	
	0	1	AM1	7232	
	0	1	AM2	7212	
	0	1	AM2	7222	
	0	1	AM2	7225	
	0	2	AM2	7232	
	0	1	AM3		
	0	1	AM3	7222	
	0	1	AM3	7225	
	0	1	AM3	7232	
	0	2	AO1	6802	
	0	1	AO3	6802	
	0	1	APOCM	8300	
	0	1	APOCS		
	0	1	APO1		
	0	1	APO1		9526
	0	1	APO1		9527
	0	1	APO2		
	0	1	APO2		9526
	0	1	ASCS	7609	
	0	1	ASC	7609	
	0	1	AS1	7606	7222
	0	3	AS1	7609	
	0	1	AS1	7614	
	0	1	AS1		9502
	0	1	AS2	7603	
	0	2	AS2	7606	
	0	1	AS2	7607	
	0	4	AS2	7614	
	0	1	AS2		9502
	0	1	AS3	7601	

II.A.1.b. BILLETS REQUIRED FOR OPERATIONAL AND FLEET SUPPORT ACTIVITIES

ACTIVITY, UIC, PHASING INCREMENT	BILLETS OFF	BILLETS ENL	DESIG/ RATING	PNEC/ PMOS	SNEC/ SMOS
ACDU	0	1	AS3	7606	
	0	1	AS3	7607	
	0	1	AS3	7612	
	0	1	AS3	7614	
	0	3	ATC		
	0	1	ATC	6664	
	0	1	AT1	6612	6609
	0	1	AT1	6664	
	0	1	AT1	6710	
	0	1	AT1	6721	
	0	1	AT1		9503
	0	1	AT2	6526	
	0	1	AT2	6613	
	0	1	AT2	6615	
	0	1	AT2	6673	9526
	0	1	AT2	6716	9527
	0	1	AT2	6717	
	0	1	AT2	6718	
	0	1	AT2	6718	9526
	0	2	AT2	6721	
	0	1	AT3	6615	9527
	0	2	AT3	6673	
	0	1	AT3	6673	9526
	0	1	AZ1		
	0	1	AZ1	6314	
	0	5	AZ2		
	0	5	AZ3		
	0	1	MR1		
	0	1	PR1		
	0	2	PR1	7356	
	0	2	PR2		
	0	1	PR2	7356	
	0	3	PR3		
SELRES	0	2	AD1	6418	
	0	6	AD2		
	0	6	AD3		
	0	1	AE1	7175	
	0	1	AE2	7136	
	0	1	AE2	7137	
	0	1	AE3	7175	
	0	1	AK1		
	0	1	AK1		9590
	0	3	AK2		
	0	4	AK3		
	0	1	AM2	7212	
	0	1	AM2	7222	
	0	1	AM2	7225	

II.A.1.b. BILLETS REQUIRED FOR OPERATIONAL AND FLEET SUPPORT ACTIVITIES

ACTIVITY, UIC, PHASING INCREMENT	BILLETS OFF	BILLETS ENL	DESIG/ RATING	PNEC/ PMOS	SNEC/ SMOS
SELRES	0	1	AM3		
	0	1	AO1	6802	
	0	2	AO2	6802	
	0	2	AO3		
	0	1	AS1		
	0	3	AS1	7609	
	0	1	AS2	7601	
	0	1	AS2	7607	
	0	2	AS2	7614	
	0	1	AS3	7601	
	0	2	AS3	7606	
	0	2	AS3	7607	
	0	1	AS3	7614	
	0	1	ATC		
	0	2	AT1		
	0	1	AT1	6529	
	0	1	AT1	6615	
	0	1	AT1	6710	
	0	3	AT2		
	0	1	AT2	6629	
	0	2	AT2	6664	
	0	2	AT2	6673	
	0	1	AT2	6710	
	0	2	AT2	6716	
	0	2	AT2	6717	
	0	1	AT2	6718	
	0	1	AT2		9526
	0	1	AT3	6529	
	0	1	AT3	6717	
	0	2	AZ1		
	0	5	AZ2		
	0	7	AZ3		
	0	2	PR1		
	0	2	PR2		
	0	2	PR3		
ACTIVITY TOTAL:	5	241			
AIMD NAS Whidbey Island, 44329					
ACDU	4	0	1520		
	4	0	6330		
	1	0	6380		
	1	0	7380		
	0	1	ADCS		
	0	1	ADC		
	0	2	ADC	6416	
	0	1	ADC	6418	
	0	4	AD1	6415	

II.A.1.b. BILLETS REQUIRED FOR OPERATIONAL AND FLEET SUPPORT ACTIVITIES

ACTIVITY, UIC, PHASING INCREMENT	BILLETS OFF	BILLETS ENL	DESIG/ RATING	PNEC/ PMOS	SNEC/ SMOS
ACDU	0	7	AD1	6419	6426
	0	2	AD1	6422	
	0	12	AD2		
	0	2	AD2	6403	
	0	8	AD2	6418	
	0	1	AD2	6419	
	0	2	AD2	6422	
	0	17	AD3		
	0	7	AD3	6418	
	0	3	AD3	6422	
	0	1	AECS		
	0	1	AEC	7133	
	0	1	AE1	6701	
	0	1	AE1	7131	
	0	1	AE1	7137	
	0	1	AE1	7175	
	0	2	AE2		
	0	1	AE2	7105	7133
	0	3	AE2	7131	
	0	1	AE2	7137	
	0	3	AE2	7137	9526
	0	1	AE2	7173	
	0	1	AE2	7197	
	0	1	AE2	8312	
	0	3	AE3		
	0	5	AE3	7105	7133
	0	4	AE3	7131	
	0	3	AE3	7197	
	0	5	AEAN	7131	
	0	1	AK1		
	0	1	AK1	8012	
	0	6	AK2		
	0	2	AK2		9595
	0	4	AK3		
	0	1	AMCS		
	0	2	AMC		
	0	2	AM1		
	0	3	AM1	7212	
	0	1	AM1	7222	
	0	1	AM1	7225	
	0	2	AM1	7232	
	0	3	AM1		9595
	0	2	AM2		
	0	4	AM2	7222	
	0	2	AM2	7225	
	0	3	AM2	7232	
	0	1	AM2		9595
	0	6	AM3		

II.A.1.b. BILLETS REQUIRED FOR OPERATIONAL AND FLEET SUPPORT ACTIVITIES

ACTIVITY, UIC, PHASING INCREMENT	BILLETS OFF	BILLETS ENL	DESIG/ RATING	PNEC/ PMOS	SNEC/ SMOS
ACDU	0	5	AM3	7222	
	0	1	AM3	7225	
	0	2	AM3	7232	
	0	1	AMEC		
	0	1	AME1		
	0	1	AME1	8332	
	0	4	AME2		
	0	5	AME3	8319	
	0	1	AOC		
	0	1	AO1		
	0	2	AO1	6802	
	0	3	AO2	6802	
	0	2	AO3	6802	
	0	2	APOCM		
	0	1	APOCM	8300	
	0	2	APOCS		
	0	3	APO1		9526
	0	1	APO1		9590
	0	3	APO2		9526
	0	1	ASCS	7609	
	0	1	ASC		
	0	4	ASC	7609	
	0	1	AS1		
	0	1	AS1	7606	7616
	0	7	AS1	7609	
	0	1	AS1	7614	
	0	1	AS1		9502
	0	1	AS1		9590
	0	1	AS2	7222	
	0	2	AS2	7601	
	0	1	AS2	7603	
	0	3	AS2	7606	
	0	1	AS2	7606	7222
	0	2	AS2	7606	7607
	0	2	AS2	7607	
	0	2	AS2	7609	
	0	7	AS2	7612	
	0	1	AS2	7612	7222
	0	1	AS2	7612	7614
	0	3	AS2	7614	
	0	1	AS2	7614	7607
	0	1	AS2	7614	7609
	0	1	AS2	7614	7616
	0	1	AS2		9502
	0	2	AS2		9595
	0	1	AS3	7601	
	0	1	AS3	7603	
	0	4	AS3	7606	

II.A.1.b. BILLETS REQUIRED FOR OPERATIONAL AND FLEET SUPPORT ACTIVITIES

ACTIVITY, UIC, PHASING INCREMENT	BILLETS OFF	BILLETS ENL	DESIG/ RATING	PNEC/ PMOS	SNEC/ SMOS
ACDU	0	3	AS3	7606	7607
	0	3	AS3	7607	
	0	1	AS3	7607	7222
	0	5	AS3	7612	
	0	1	AS3	7612	7614
	0	5	AS3	7614	
	0	1	ASAN	7614	
	0	1	ATCS		
	0	7	ATC		
	0	1	ATC	6647	
	0	1	AT1		
	0	1	AT1	6611	6613
	0	2	AT1	6612	
	0	1	AT1	6633	
	0	1	AT1	6634	
	0	1	AT1	6647	
	0	1	AT1	6689	
	0	1	AT1	6701	9595
	0	3	AT1	6705	
	0	1	AT1	6721	
	0	1	AT1		9503
	0	2	AT1		9526
	0	1	AT1		9590
	0	3	AT2		
	0	1	AT2	6526	
	0	1	AT2	6529	
	0	2	AT2	6534	
	0	3	AT2	6605	
	0	1	AT2	6605	6606
	0	1	AT2	6606	6710
	0	2	AT2	6607	
	0	1	AT2	6609	
	0	1	AT2	6611	6613
	0	3	AT2	6612	
	0	3	AT2	6612	6710
	0	1	AT2	6618	9527
	0	6	AT2	6633	
	0	3	AT2	6647	
	0	3	AT2	6648	
	0	1	AT2	6664	9526
	0	2	AT2	6680	
	0	1	AT2	6686	
	0	5	AT2	6704	
	0	1	AT2	6716	
	0	1	AT2	6717	
	0	1	AT2	6717	6611
	0	2	AT2	6721	
	0	1	AT3		

II.A.1.b. BILLETS REQUIRED FOR OPERATIONAL AND FLEET SUPPORT ACTIVITIES

ACTIVITY, UIC, PHASING INCREMENT	BILLETS OFF	BILLETS ENL	DESIG/ RATING	PNEC/ PMOS	SNEC/ SMOS
ACDU	0	1	AT3	6529	
	0	1	AT3	6534	9527
	0	1	AT3	6605	
	0	1	AT3	6607	
	0	6	AT3	6611	6613
	0	7	AT3	6612	
	0	4	AT3	6633	
	0	1	AT3	6634	6529
	0	6	AT3	6647	
	0	5	AT3	6648	
	0	8	AT3	6680	
	0	8	AT3	6704	
	0	1	AT3	6710	
	0	1	AT3	6716	
	0	1	AT3	6717	
	0	2	ATAN	6605	6710
	0	2	ATAN	6609	6717
	0	1	ATAN	6612	
	0	1	AZC		
	0	8	AZ1		
	0	1	AZ1	6314	
	0	15	AZ2		
	0	8	AZ3		
	0	2	MR2		
	0	1	MR2	4402	
	0	1	MR2	4404	
	0	1	MR3		
	0	2	PO1	6673	
	0	3	PO2	6673	
	0	2	PO2	6673	9526
	0	1	PO2	6718	
	0	4	PO3	6673	
	0	1	PRCS		
	0	3	PR1		
	0	2	PR1	7356	
	0	2	PR2		
	0	5	PR2	7356	
	0	3	PR3		
	0	1	PRAN		
	0	1	SKC		
ACTIVITY TOTAL:	10	473			
COMPATRECON WING 10, NAS Whidbey Island, 55165					
ACDU	1	0	1300		
	11	0	1302		
	1	0	1630		
	1	0	1800		

II.A.1.b. BILLETS REQUIRED FOR OPERATIONAL AND FLEET SUPPORT ACTIVITIES

ACTIVITY, UIC, PHASING INCREMENT	BILLETS OFF	BILLETS ENL	DESIG/ RATING	PNEC/ PMOS	SNEC/ SMOS
ACDU	1	0	6330		
	1	0	7380		
	0	1	ADC	8319	9502
	0	1	AD1	8319	9502
	0	2	AE1	8251	
	0	1	AE1	8251	9502
	0	1	AK2		
	0	1	AMC	8319	
	0	1	AM1	8310	9502
	0	1	AOC	8319	
	0	1	AO1	8319	9502
	0	1	AO2	8319	9502
	0	1	APOCM	8300	
	0	1	ATC	6640	9502
	0	1	AT1	6640	9502
	0	1	AWCS		
	0	1	AWC	7836	7841
	0	2	AWC	7841	9502
	0	1	AWC	7861	
	0	1	AW1	7841	
	0	1	AW1	7841	9502
	0	1	AW1	7861	
	0	1	AW2	7861	9502
	0	1	AZ1		
	0	1	AZ1	6315	
	0	2	ET2		
	0	1	IT2		
	0	1	NC1		
	0	1	POC		9515
	0	1	YNCM		
	0	1	YNC		9588
	0	1	YN1		
	0	1	YN2		
TAR	1	0	1302		
SELRES	0	1	AK1		
	0	1	AT1	6640	9502
	0	1	SKC		
ACTIVITY TOTAL:	17	37			
COMPATWING 1, 09451					
ACDU	1	0	1312		
ACTIVITY TOTAL:	1	0			

Patrol Recon Force Pacific, MCB Kaneohe Bay, 09517

II.A.1.b. BILLETS REQUIRED FOR OPERATIONAL AND FLEET SUPPORT ACTIVITIES

ACTIVITY, UIC, PHASING INCREMENT	BILLETS OFF	BILLETS ENL	DESIG/ RATING	PNEC/ PMOS	SNEC/ SMOS
ACDU	3	0	1300		
	17	0	1302		
	2	0	1310		
	3	0	1312		
	7	0	1322		
	1	0	1630		
	1	0	1800		
	1	0	2500		
	1	0	6190		
	1	0	6330		
	1	0	6360		
	1	0	6410		
	1	0	7380		
	0	1	ADC	8251	
	0	1	ADC	8251	9502
	0	1	ADC	8319	
	0	1	AD2	8319	
	0	1	AEC	8251	
	0	1	AEC	8319	
	0	1	AK2		
	0	1	AMC	8319	
	0	1	AOC	8319	
	0	1	AOC	8319	9502
	0	1	AO1	8319	0812
	0	1	AO1	8319	9502
	0	2	AO2	8319	9502
	0	1	APOC	8251	
	0	1	APO1		
	0	1	ASC		
	0	2	ATCS		
	0	1	ATC	8319	
	0	1	AT1	8319	
	0	1	AT2	8262	9502
	0	1	AVCM	8300	
	0	1	AWCS	7841	
	0	1	AWCS	7861	9502
	0	1	AWC	7841	
	0	1	AWC	7841	7861
	0	1	AWC	7841	9502
	0	1	AWC	7861	
	0	6	AW1	7841	9502
	0	5	AW1	7861	9502
	0	1	AZC	6315	
	0	1	AZ1	6315	
	0	1	CTA1		9190
	0	1	CTO1		
	0	1	ETC	1685	9512
	0	1	ISC	3910	

II.A.1.b. BILLETS REQUIRED FOR OPERATIONAL AND FLEET SUPPORT ACTIVITIES

ACTIVITY, UIC, PHASING INCREMENT	BILLETS OFF	BILLETS ENL	DESIG/ RATING	PNEC/ PMOS	SNEC/ SMOS
ACDU	0	1	IS2		
	0	1	IS2	3905	
	0	2	ITC	2735	
	0	1	IT1		
	0	1	IT2		
	0	1	LN1		
	0	1	NCC		
	0	1	OSC		
	0	1	PN2		
	0	2	POCM		9580
	0	1	POC		9519
	0	1	PO1		9595
	0	1	YNCS	2514	
	0	1	YNC		
	0	1	YN1		
	0	3	YN2		
SELRES	5	0	1302		
	1	0	1630		
	0	1	AWC		
	0	1	ET1		
	0	1	ITC	2735	
	0	1	OSC		
	0	1	YN1		
ACTIVITY TOTAL:	46	71			
Patrol Reconnaissance Wing One Det Diego Garcia, 44468					
ACDU	6	0	1302		
	1	0	1630		
ACTIVITY TOTAL:	7	0			
Patrol Reconnaissance Wing One Det Misawa, 35667					
ACDU	1	0	1630		
ACTIVITY TOTAL:	1	0			
Patrol Reconnaissance Wing One Det Okinawa, 32515					
ACDU	12	0	1302		
	1	0	1630		
ACTIVITY TOTAL:	13	0			
Reserve Patrol Wing (Pacific), NAS Moffett Field, 09160					
ACDU	0	1	ADC	8251	8319
	0	1	AK2		
	0	1	AM1	8319	

II.A.1.b. BILLETS REQUIRED FOR OPERATIONAL AND FLEET SUPPORT ACTIVITIES

ACTIVITY, UIC, PHASING INCREMENT	BILLETS OFF	BILLETS ENL	DESIG/ RATING	PNEC/ PMOS	SNEC/ SMOS
ACDU	0	1	ATC		
	0	1	AWC	7861	
	0	1	AW1	7821	
	0	1	AW1	7821	9502
	0	1	AW1	7861	9502
	0	1	AW2	7841	9502
	0	1	AZC	6315	
	0	1	AZ2		
	0	1	NCC		
	0	1	PNC		
	0	1	YNC		
	0	1	YN3		
TAR	4	0	1302		
	1	0	1312		
	0	1	AOCS	8271	
	0	1	ATCS	8262	
	0	1	AWCS	7861	
ACTIVITY TOTAL:	5	18			
VPU-2, MCB Kaneohe Bay, 09244					
ACDU	2	0	1301		
	18	0	1311		
	14	0	1321		
	1	0	1520		
	1	0	1630		
	1	0	2102		
	1	0	6330		
	1	0	7380		
	0	1	ADC	8319	
	0	4	AD1	8319	
	0	3	AD2	8319	
	0	3	AD3	8819	
	0	3	ADAN	8819	
	0	2	AE1	8319	
	0	3	AE2	8319	
	0	3	AE3	8319	
	0	3	AEAN	8819	
	0	1	AK1		
	0	2	AK2		
	0	1	AK2		9590
	0	1	AK3		
	0	1	AKAN		
	0	1	AMC	8319	
	0	6	AM1	8319	
	0	4	AM2	8319	
	0	5	AM3	8819	

II.A.1.b. BILLETS REQUIRED FOR OPERATIONAL AND FLEET SUPPORT ACTIVITIES

ACTIVITY, UIC, PHASING INCREMENT	BILLETS OFF	BILLETS ENL	DESIG/ RATING	PNEC/ PMOS	SNEC/ SMOS
ACDU	0	4	AMAN	8819	
	0	1	AME1	8319	
	0	3	AME2	8319	
	0	1	AME3	8319	
	0	1	AMEAN	8319	
	0	1	AO1	8319	0812
	0	1	APOCM	8300	
	0	2	APOCS		
	0	2	APOCS	8800	
	0	3	APOC	8251	
	0	2	APOC	8284	
	0	1	APOC	8319	
	0	2	APOC	8319	8800
	0	4	APO1		
	0	3	APO1	8251	
	0	3	APO1	8284	
	0	2	APO1	8319	
	0	1	APO1		9595
	0	3	APO2		
	0	4	APO2	8251	
	0	7	APO2	8284	
	0	2	APO3	8284	
	0	1	ATCS		
	0	1	ATC	8262	
	0	1	ATC	8319	
	0	1	AT1	6635	9526
	0	3	AT1	8262	
	0	4	AT1	8319	
	0	1	AT1	8319	6701
	0	1	AT2	6618	9527
	0	1	AT2	6631	
	0	1	AT2	6635	9527
	0	2	AT2	6639	
	0	9	AT2	8262	
	0	3	AT2	8319	
	0	2	AT2	9402	
	0	1	AT3	6535	9527
	0	1	AT3	6634	
	0	2	AT3	6639	
	0	1	AT3	8262	
	0	1	AT3	8819	
	0	2	AT3	9402	
	0	3	ATAN	8819	
	0	2	AWC	7841	
	0	3	AW1	7841	
	0	2	AW2	7841	
	0	1	AW3	7841	
	0	1	AZ1		

II.A.1.b. BILLETS REQUIRED FOR OPERATIONAL AND FLEET SUPPORT ACTIVITIES

ACTIVITY, UIC, PHASING INCREMENT	BILLETS OFF	BILLETS ENL	DESIG/ RATING	PNEC/ PMOS	SNEC/ SMOS
ACDU	0	5	AZ2		
	0	1	AZ2	6303	
	0	1	AZ3		
	0	1	AZAN		
	0	1	CTA1	9190	
	0	1	CTT1	9102	8295
	0	1	DK2	2905	
	0	1	DM2		
	0	1	ET2	1677	
	0	1	HM2	8406	
	0	1	ISC	3910	
	0	2	IS1	3910	3924
	0	1	IS1	3924	
	0	1	IT1	2735	
	0	1	IT1	2781	
	0	4	IT2	2735	
	0	1	IT2	2780	
	0	1	IT3	2735	
	0	1	NC1		
	0	2	PH1	8288	
	0	1	PH2	8143	
	0	2	PH2	8288	
	0	1	PN1		
	0	1	PN2		
	0	1	PN3		
	0	1	PNSN		
	0	1	POCM		9580
	0	3	PO2	6718	
	0	1	PO3		
	0	1	PR1		
	0	2	PR2		
	0	1	PRAN		
	0	1	YNC		
	0	1	YN2		
	0	1	YN3		
	0	2	YNSN		
	0	15	AN		
ACTIVITY TOTAL:	39	216			

II.A.1.c. TOTAL BILLETS REQUIRED FOR OPERATIONAL AND FLEET SUPPORT ACTIVITIES

DESIG/ RATING	PNEC/SNEC PMOS/SMOS	PFYs OFF	PFYs ENL	CFY03 OFF	CFY03 ENL	FY04 OFF	FY04 ENL	FY05 OFF	FY05 ENL	FY06 OFF	FY06 ENL	FY07 OFF	FY07 ENL
USN OPERATIONAL ACTIVITIES - ACDU													
1110			1	0		0		0		0		0	
1120			2	0		0		0		0		0	
1302			34	0		0		0		0		0	
1311			561	0		0		0		0		0	
1312			79	0		0		0		0		0	
1321			376	0		0		0		0		0	
1322			70	0		0		0		0		0	
1512			2	0		0		0		0		0	
1520			12	0		0		0		0		0	
1630			14	0		0		0		0		0	
2102			15	0		0		0		0		0	
3100			1	0		0		0		0		0	
6320			13	0		0		0		0		0	
6330			6	0		0		0		0		0	
6380			13	0		0		0		0		0	
6410			2	0		0		0		0		0	
7340			6	0		0		0		0		0	
7360			12	0		0		0		0		0	
7380			1	0		0		0		0		0	
ADCS			2		0		0		0		0		0
ADC	8319		15		0		0		0		0		0
AD1	6415		2		0		0		0		0		0
AD1	8251 8319		1		0		0		0		0		0
AD1	8319		82		0		0		0		0		0
AD2	6418		15		0		0		0		0		0
AD2	8241		1		0		0		0		0		0
AD2	8319		81		0		0		0		0		0
AD3	6418		12		0		0		0		0		0
AD3	8819		135		0		0		0		0		0
ADAN	6418		24		0		0		0		0		0
ADAN	8241		1		0		0		0		0		0
ADAN	8819		155		0		0		0		0		0
AECS	7182		1		0		0		0		0		0
AEC	8319		13		0		0		0		0		0
AE1	7182		1		0		0		0		0		0
AE1	8319		54		0		0		0		0		0
AE2	7136		12		0		0		0		0		0
AE2	7182		1		0		0		0		0		0
AE2	8251		2		0		0		0		0		0
AE2	8319		56		0		0		0		0		0
AE3	7137		12		0		0		0		0		0
AE3	7175		12		0		0		0		0		0
AE3	8319		3		0		0		0		0		0
AE3	8819		75		0		0		0		0		0
AEAN	8819		115		0		0		0		0		0

II.A.1.c. TOTAL BILLETS REQUIRED FOR OPERATIONAL AND FLEET SUPPORT ACTIVITIES

DESIG/	PNEC/SNEC		PFYs		CFY03		FY04		FY05		FY06		FY07	
RATING	PMOS/SMOS		OFF	ENL	OFF	ENL	OFF	ENL	OFF	ENL	OFF	ENL	OFF	ENL
AK1				15		0		0		0		0		0
AK2				42		0		0		0		0		0
AK2		9590		1		0		0		0		0		0
AK3				41		0		0		0		0		0
AKAN				27		0		0		0		0		0
AMC				1		0		0		0		0		0
AMC	8319			17		0		0		0		0		0
AM1	8319			99		0		0		0		0		0
AM2				12		0		0		0		0		0
AM2	8241	8319		1		0		0		0		0		0
AM2	8319			118		0		0		0		0		0
AM3	7213			12		0		0		0		0		0
AM3	8819			136		0		0		0		0		0
AMAN				26		0		0		0		0		0
AMAN	8819			217		0		0		0		0		0
AMEC	8319			1		0		0		0		0		0
AME1	8319			28		0		0		0		0		0
AME2	8319			33		0		0		0		0		0
AME3	8319			19		0		0		0		0		0
AMEAN	8319			47		0		0		0		0		0
AOC	8319			14		0		0		0		0		0
AO1	8271			1		0		0		0		0		0
AO1	8319	0812		43		0		0		0		0		0
AO2	8241			1		0		0		0		0		0
AO2	8319			42		0		0		0		0		0
AO3				8		0		0		0		0		0
AO3	6802			15		0		0		0		0		0
AO3	8319			60		0		0		0		0		0
AOAN				65		0		0		0		0		0
AOAN	8319			30		0		0		0		0		0
APOCM	8300			14		0		0		0		0		0
APOCS				39		0		0		0		0		0
APOCS	8251			13		0		0		0		0		0
APOCS	8251	9502		1		0		0		0		0		0
APOCS	8800			44		0		0		0		0		0
APOC				3		0		0		0		0		0
APOC	8251			41		0		0		0		0		0
APOC	8251	9502		7		0		0		0		0		0
APOC	8284			1		0		0		0		0		0
APOC	8319			18		0		0		0		0		0
APOC	8319	8800		60		0		0		0		0		0
APO1				62		0		0		0		0		0
APO1		9590		13		0		0		0		0		0
APO1		9595		14		0		0		0		0		0
APO1	8251			112		0		0		0		0		0
APO1	8251	9502		28		0		0		0		0		0
APO1	8289			2		0		0		0		0		0
APO1	8319			26		0		0		0		0		0

II.A.1.c. TOTAL BILLETS REQUIRED FOR OPERATIONAL AND FLEET SUPPORT ACTIVITIES

DESIG/	PNEC/SNEC		PFYs		CFY03		FY04		FY05		FY06		FY07	
RATING	PMOS/SMOS		OFF	ENL	OFF	ENL	OFF	ENL	OFF	ENL	OFF	ENL	OFF	ENL
APO2				29		0		0		0		0		0
APO2		9590		1		0		0		0		0		0
APO2	8241			3		0		0		0		0		0
APO2	8251			184		0		0		0		0		0
APO2	8251	9502		30		0		0		0		0		0
APO2	8289			3		0		0		0		0		0
APO3				8		0		0		0		0		0
APO3	8251			36		0		0		0		0		0
APO3	8819			3		0		0		0		0		0
ATCS				1		0		0		0		0		0
ATCS	6582			1		0		0		0		0		0
ATCS	8265			1		0		0		0		0		0
ATC	8265			2		0		0		0		0		0
ATC	8319			13		0		0		0		0		0
ATC	9402			13		0		0		0		0		0
ATC	9402	9502		5		0		0		0		0		0
AT1	6582	6701		1		0		0		0		0		0
AT1	6719			12		0		0		0		0		0
AT1	8265			4		0		0		0		0		0
AT1	8319			45		0		0		0		0		0
AT1	8319	6701		12		0		0		0		0		0
AT1	9402			41		2		0		0		0		0
AT1	9402	9502		14		0		0		0		0		0
AT2	6582			1		0		0		0		0		0
AT2	6612			12		0		0		0		0		0
AT2	6614			3		0		0		0		0		0
AT2	6664	9526		12		0		0		0		0		0
AT2	6717			12		0		0		0		0		0
AT2	6719			18		0		0		0		0		0
AT2	6721			12		0		0		0		0		0
AT2	8265			1		0		0		0		0		0
AT2	8319			64		0		0		0		0		0
AT2	9402			63		0		0		0		0		0
AT2	9402	9502		25		0		0		0		0		0
AT3		9527		12		0		0		0		0		0
AT3	6526			12		0		0		0		0		0
AT3	6529			12		0		0		0		0		0
AT3	6612			12		0		0		0		0		0
AT3	6664			24		0		0		0		0		0
AT3	6716			12		0		0		0		0		0
AT3	8819			121		0		0		0		0		0
AT3	9402			75		0		0		0		0		0
ATAN	6605	6710		12		0		0		0		0		0
ATAN	6609	6717		12		0		0		0		0		0
ATAN	6717			12		0		0		0		0		0
ATAN	8819			130		0		0		0		0		0
AWCM	7841	9502		1		0		0		0		0		0
AWCS	7841			13		0		0		0		0		0

II.A.1.c. TOTAL BILLETS REQUIRED FOR OPERATIONAL AND FLEET SUPPORT ACTIVITIES

DESIG/ RATING	PNEC/SNEC PMOS/SMOS		PFYs OFF	PFYs ENL	CFY03 OFF	CFY03 ENL	FY04 OFF	FY04 ENL	FY05 OFF	FY05 ENL	FY06 OFF	FY06 ENL	FY07 OFF	FY07 ENL
AWCS	7841	9502		1		0		0		0		0		0
AWCS	7861	9502		1		0		0		0		0		0
AWC	7841			14		0		0		0		0		0
AWC	7841	9502		7		0		0		0		0		0
AWC	7861			12		0		0		0		0		0
AWC	7861	9502		4		0		0		0		0		0
AWC	7877	9502		5		0		0		0		0		0
AW1	7841			63		0		0		0		0		0
AW1	7841	9502		16		0		0		0		0		0
AW1	7861			17		0		0		0		0		0
AW1	7861	9502		16		0		0		0		0		0
AW2	7841			143		0		0		0		0		0
AW2	7841	9502		23		0		0		0		0		0
AW2	7861			65		0		0		0		0		0
AW2	7861	9502		15		0		0		0		0		0
AW3	7841			113		0		0		0		0		0
AW3	7861			53		0		0		0		0		0
AWAN	7841			66		0		0		0		0		0
AWAN	7861			52		0		0		0		0		0
AZC				2		0		0		0		0		0
AZ1				13		0		0		0		0		0
AZ1	6315			14		0		0		0		0		0
AZ2				70		0		0		0		0		0
AZ2	6303			1		0		0		0		0		0
AZ3				16		0		0		0		0		0
AZAN				48		0		0		0		0		0
CTA1	9190			1		0		0		0		0		0
DK2	2905			12		0		0		0		0		0
DK3				12		0		0		0		0		0
DM2				2		0		0		0		0		0
HM2	8406			14		0		0		0		0		0
HM3	8406			14		0		0		0		0		0
IS1				1		0		0		0		0		0
IS1	3924			12		0		0		0		0		0
IS2				13		0		0		0		0		0
IS3				12		0		0		0		0		0
ITC	2735			1		0		0		0		0		0
ITC	2781			1		0		0		0		0		0
IT1				1		0		0		0		0		0
IT1	2781			13		0		0		0		0		0
IT2				1		0		0		0		0		0
IT2	2735			1		0		0		0		0		0
IT2	2780			2		0		0		0		0		0
IT3				2		0		0		0		0		0
IT3	2735			19		0		0		0		0		0
MS2				24		0		0		0		0		0
MS3				36		0		0		0		0		0
MSSN				54		0		0		0		0		0

II.A.1.c. TOTAL BILLETS REQUIRED FOR OPERATIONAL AND FLEET SUPPORT ACTIVITIES

DESIG/ RATING	PNEC/SNEC PMOS/SMOS	PFYs OFF	PFYs ENL	CFY03 OFF	CFY03 ENL	FY04 OFF	FY04 ENL	FY05 OFF	FY05 ENL	FY06 OFF	FY06 ENL	FY07 OFF	FY07 ENL
NCC			1		0		0		0		0		0
NC1			14		0		0		0		0		0
PH2	8133		12		0		0		0		0		0
PH2	8288		12		0		0		0		0		0
PH3	8133		12		0		0		0		0		0
PN1			12		0		0		0		0		0
PN2			14		0		0		0		0		0
PN3			12		0		0		0		0		0
PNSN			24		0		0		0		0		0
POCM	9580		14		0		0		0		0		0
POC			1		0		0		0		0		0
PO1	9571		15		0		0		0		0		0
PO2			4		0		0		0		0		0
PO2	6718		55		0		0		0		0		0
PO3			13		0		0		0		0		0
PRC			1		0		0		0		0		0
PR1			15		0		0		0		0		0
PR2			40		0		0		0		0		0
PR3			30		0		0		0		0		0
PRAN			42		0		0		0		0		0
SKC			14		0		0		0		0		0
YNCS			1		0		0		0		0		0
YNC			13		0		0		0		0		0
YN1			4		0		0		0		0		0
YN2			39		0		0		0		0		0
YN3			22		0		0		0		0		0
YNSN			59		0		0		0		0		0
AN			383		0		0		0		0		0
SN			3		0		0		0		0		0
	8251		1		0		0		0		0		0
USN OPERATIONAL ACTIVITIES - TAR													
1311		52		0		0		0		0		0	
1321		39		0		0		0		0		0	
1520		7		0		0		0		0		0	
6330		7		0		0		0		0		0	
7340		3		0		0		0		0		0	
ADC	8319		7		0		0		0		0		0
AD1	8251 8319		3		0		0		0		0		0
AD1	8319		14		0		0		0		0		0
AD2	6418		3		0		0		0		0		0
AD2	8319		14		0		0		0		0		0
AD3	6418		3		0		0		0		0		0
AD3	8819		25		0		0		0		0		0
ADAN	6418		7		0		0		0		0		0
ADAN	8819		3		0		0		0		0		0
AE1	8319		14		0		0		0		0		0
AE2	7136		7		0		0		0		0		0

II.A.1.c. TOTAL BILLETS REQUIRED FOR OPERATIONAL AND FLEET SUPPORT ACTIVITIES

DESIG/ RATING	PNEC/SNEC PMOS/SMOS		PFYs OFF	PFYs ENL	CFY03 OFF	CFY03 ENL	FY04 OFF	FY04 ENL	FY05 OFF	FY05 ENL	FY06 OFF	FY06 ENL	FY07 OFF	FY07 ENL
AE2	8319			14		0		0		0		0		0
AE3	7137			7		0		0		0		0		0
AE3	7175			7		0		0		0		0		0
AE3	8819			7		0		0		0		0		0
AEAN	8819			7		0		0		0		0		0
AK1				7		0		0		0		0		0
AK2				10		0		0		0		0		0
AK2		9590		4		0		0		0		0		0
AK3				7		0		0		0		0		0
AKAN				3		0		0		0		0		0
AMC	8319			7		0		0		0		0		0
AM1	8251			3		0		0		0		0		0
AM1	8319			7		0		0		0		0		0
AM1	8319	9595		7		0		0		0		0		0
AM2	7232			7		0		0		0		0		0
AM2	8251			6		0		0		0		0		0
AM2	8319			28		0		0		0		0		0
AM3	7213			7		0		0		0		0		0
AM3	8819			25		0		0		0		0		0
AMAN				3		0		0		0		0		0
AMAN	8819			25		0		0		0		0		0
AME1	8319			7		0		0		0		0		0
AME2	8319			7		0		0		0		0		0
AMEAN	8319			3		0		0		0		0		0
AO1	8271			7		0		0		0		0		0
AO1	8319	0812		7		0		0		0		0		0
AO2	8271			7		0		0		0		0		0
AO2	8319			7		0		0		0		0		0
AO3	6802			3		0		0		0		0		0
AO3	8271			7		0		0		0		0		0
APOCS				6		0		0		0		0		0
APOCS	8800			8		0		0		0		0		0
APOC				17		0		0		0		0		0
APOC	8251			14		0		0		0		0		0
APOC	8319	8800		4		0		0		0		0		0
APO1				11		0		0		0		0		0
APO1		9595		4		0		0		0		0		0
APO1	8251			41		0		0		0		0		0
APO2				4		0		0		0		0		0
APO2	8251			28		0		0		0		0		0
ATC	8262			7		0		0		0		0		0
ATC	8319			7		0		0		0		0		0
AT1				3		0		0		0		0		0
AT1	8262			7		0		0		0		0		0
AT1	8319			14		0		0		0		0		0
AT2	6605	6606		3		0		0		0		0		0
AT2	6612			3		0		0		0		0		0
AT2	6664	9526		4		0		0		0		0		0

II.A.1.c. TOTAL BILLETS REQUIRED FOR OPERATIONAL AND FLEET SUPPORT ACTIVITIES

DESIG/ RATING	PNEC/SNEC PMOS/SMOS		PFYs OFF	PFYs ENL	CFY03 OFF	CFY03 ENL	FY04 OFF	FY04 ENL	FY05 OFF	FY05 ENL	FY06 OFF	FY06 ENL	FY07 OFF	FY07 ENL
AT2	8262			21		0		0		0		0		0
AT2	8319			14		0		0		0		0		0
AT3				4		0		0		0		0		0
AT3		9527		3		0		0		0		0		0
AT3	6526			7		0		0		0		0		0
AT3	6534	9527		3		0		0		0		0		0
AT3	6611	6609		3		0		0		0		0		0
AT3	6634	6529		3		0		0		0		0		0
AT3	6664			7		0		0		0		0		0
AT3	8262			10		0		0		0		0		0
AT3	8819			14		0		0		0		0		0
ATAN				3		0		0		0		0		0
ATAN	6611	6609		3		0		0		0		0		0
ATAN	6612			3		0		0		0		0		0
ATAN	6613			3		0		0		0		0		0
ATAN	8819			14		0		0		0		0		0
AWC	7821			4		0		0		0		0		0
AWC	7861			3		0		0		0		0		0
AW1	7821			8		0		0		0		0		0
AW1	7841			6		0		0		0		0		0
AW1	7861			4		0		0		0		0		0
AW2	7821			8		0		0		0		0		0
AW2	7841			6		0		0		0		0		0
AW2	7861			10		0		0		0		0		0
AW3	7821			4		0		0		0		0		0
AW3	7841			3		0		0		0		0		0
AW3	7861			7		0		0		0		0		0
AZ1				7		0		0		0		0		0
AZ2				14		0		0		0		0		0
AZ2	6303			7		0		0		0		0		0
DK2				3		0		0		0		0		0
DK2	2905			3		0		0		0		0		0
HM2	8406			7		0		0		0		0		0
IT3	2735			7		0		0		0		0		0
MS3				7		0		0		0		0		0
MSSN				7		0		0		0		0		0
NC1				7		0		0		0		0		0
PN2				14		0		0		0		0		0
PN3				4		0		0		0		0		0
POCM		9580		7		0		0		0		0		0
PR1				7		0		0		0		0		0
PR3				14		0		0		0		0		0
PRAN				7		0		0		0		0		0
YNC				7		0		0		0		0		0
YN2				7		0		0		0		0		0
YN3				14		0		0		0		0		0

USN OPERATIONAL ACTIVITIES - SELRES

II.A.1.c. TOTAL BILLETS REQUIRED FOR OPERATIONAL AND FLEET SUPPORT ACTIVITIES

DESIG/ RATING	PNEC/SNEC PMOS/SMOS	PFYs OFF	PFYs ENL	CFY03 OFF	CFY03 ENL	FY04 OFF	FY04 ENL	FY05 OFF	FY05 ENL	FY06 OFF	FY06 ENL	FY07 OFF	FY07 ENL
1301		8		0		0		0		0		0	
1302		6		0		0		0		0		0	
1311		232		0		0		0		0		0	
1321		150		0		0		0		0		0	
1630		7		0		0		0		0		0	
2102		7		0		0		0		0		0	
6321		3		0		0		0		0		0	
6380		4		0		0		0		0		0	
AD2	6418		4		0		0		0		0		0
AD2	8319		7		0		0		0		0		0
AD3	6418		4		0		0		0		0		0
AD3	8819		10		0		0		0		0		0
ADAN	6418		4		0		0		0		0		0
ADAN	8819		25		0		0		0		0		0
AE3	8819		7		0		0		0		0		0
AEAN	8819		17		0		0		0		0		0
AK2			4		0		0		0		0		0
AK3			7		0		0		0		0		0
AKAN			4		0		0		0		0		0
AM1	8319		14		0		0		0		0		0
AM2	8319		7		0		0		0		0		0
AM3	7213		4		0		0		0		0		0
AM3	8819		7		0		0		0		0		0
AMAN			4		0		0		0		0		0
AMAN	8819		35		0		0		0		0		0
AME1	8319		7		0		0		0		0		0
AME3	8319		7		0		0		0		0		0
AMEAN	8319		11		0		0		0		0		0
AOC	8271		7		0		0		0		0		0
AO1	8271		7		0		0		0		0		0
AO1	8319 0812		7		0		0		0		0		0
AO2	8271		21		0		0		0		0		0
AO2	8319		3		0		0		0		0		0
AO3			10		0		0		0		0		0
AO3	8271		25		0		0		0		0		0
AOAN			14		0		0		0		0		0
AOAN	8271		21		0		0		0		0		0
AOAN	8319		6		0		0		0		0		0
APOCM	8300		7		0		0		0		0		0
APOCS			14		0		0		0		0		0
APOCS	8251		7		0		0		0		0		0
APO1			28		0		0		0		0		0
APO1	8251		16		0		0		0		0		0
APO2	8251		71		0		0		0		0		0
APO3			7		0		0		0		0		0
AT1	8262		7		0		0		0		0		0
AT2	6612		4		0		0		0		0		0
AT2	6617		4		0		0		0		0		0

II.A.1.c. TOTAL BILLETS REQUIRED FOR OPERATIONAL AND FLEET SUPPORT ACTIVITIES

DESIG/	PNEC/SNEC		PFYs		CFY03		FY04		FY05		FY06		FY07	
RATING	PMOS/SMOS		OFF	ENL	OFF	ENL	OFF	ENL	OFF	ENL	OFF	ENL	OFF	ENL
AT2	8262			6		0		0		0		0		0
AT2	8319			7		0		0		0		0		0
AT3		9527		4		0		0		0		0		0
AT3	6534	9527		4		0		0		0		0		0
AT3	6612			4		0		0		0		0		0
AT3	6664			4		0		0		0		0		0
AT3	8262			28		0		0		0		0		0
AT3	8819			24		0		0		0		0		0
ATAN	6605	6606		3		0		0		0		0		0
ATAN	6710			4		0		0		0		0		0
ATAN	6716			4		0		0		0		0		0
ATAN	6717			8		0		0		0		0		0
ATAN	8819			11		0		0		0		0		0
AWCS	7821			4		0		0		0		0		0
AWCS	7841			3		0		0		0		0		0
AWC	7861			7		0		0		0		0		0
AW1	7821			8		0		0		0		0		0
AW1	7841			6		0		0		0		0		0
AW1	7861			10		0		0		0		0		0
AW2	7821			24		0		0		0		0		0
AW2	7841			21		0		0		0		0		0
AW2	7861			25		0		0		0		0		0
AW3	7821			32		0		0		0		0		0
AW3	7841			21		0		0		0		0		0
AW3	7861			21		0		0		0		0		0
AWAN	7821			20		0		0		0		0		0
AWAN	7841			15		0		0		0		0		0
AWAN	7861			14		0		0		0		0		0
AZ3				7		0		0		0		0		0
AZAN				7		0		0		0		0		0
DK2				8		0		0		0		0		0
DK3				7		0		0		0		0		0
HM3	8406			7		0		0		0		0		0
IS1				7		0		0		0		0		0
ISSN				14		0		0		0		0		0
IT1	2781			3		0		0		0		0		0
MS2				14		0		0		0		0		0
MS3				7		0		0		0		0		0
MSSN				21		0		0		0		0		0
PH2	8143			7		0		0		0		0		0
PH2	8288			7		0		0		0		0		0
PH3	8133			7		0		0		0		0		0
PN1				7		0		0		0		0		0
PN3				10		0		0		0		0		0
PO2	6718			35		0		0		0		0		0
PO3				7		0		0		0		0		0
YNSN				14		0		0		0		0		0
AN				140		0		0		0		0		0

II.A.1.c. TOTAL BILLETS REQUIRED FOR OPERATIONAL AND FLEET SUPPORT ACTIVITIES

DESIG/ RATING	PNEC/SNEC PMOS/SMOS	PFYs OFF	PFYs ENL	CFY03 OFF	CFY03 ENL	FY04 OFF	FY04 ENL	FY05 OFF	FY05 ENL	FY06 OFF	FY06 ENL	FY07 OFF	FY07 ENL
USN FLEET SUPPORT ACTIVITIES - ACDU													
1120		1		0		0		0		0		0	
1300		5		0		0		0		0		0	
1301		4		0		0		0		0		0	
1302		59		0		0		0		0		0	
1310		3		0		0		0		0		0	
1311		36		0		0		0		0		0	
1312		7		0		0		0		0		0	
1321		27		0		0		0		0		0	
1322		12		0		0		0		0		0	
1520		31		0		0		0		0		0	
1630		16		0		0		0		0		0	
1800		2		0		0		0		0		0	
2102		2		0		0		0		0		0	
2302		1		0		0		0		0		0	
2500		1		0		0		0		0		0	
6190		1		0		0		0		0		0	
6320		1		0		0		0		0		0	
6330		17		0		0		0		0		0	
6360		2		0		0		0		0		0	
6380		8		0		0		0		0		0	
6410		1		0		0		0		0		0	
6460		1		0		0		0		0		0	
7340		11		0		0		0		0		0	
7360		1		0		0		0		0		0	
7380		7		0		0		0		0		0	
ADCS			7		0		0		0		0		0
ADCS	8251		2		0		0		0		0		0
ADC			16		0		0		0		0		0
ADC	6416		2		0		0		0		0		0
ADC	6418		5		0		0		0		0		0
ADC	6421		1		0		0		0		0		0
ADC	6422		3		0		0		0		0		0
ADC	8251		1		0		0		0		0		0
ADC	8251 8319		1		0		0		0		0		0
ADC	8251 9502		1		0		0		0		0		0
ADC	8319		5		0		0		0		0		0
ADC	8319 9502		2		0		0		0		0		0
AD1			2		0		0		0		0		0
AD1	6403		1		0		0		0		0		0
AD1	6403 6418		1		0		0		0		0		0
AD1	6415		5		0		0		0		0		0
AD1	6418		16		0		0		0		0		0
AD1	6419 6426		33		0		0		0		0		0
AD1	6420		3		0		0		0		0		0
AD1	6421		5		0		0		0		0		0
AD1	6422		11		0		0		0		0		0

II.A.1.c. TOTAL BILLETS REQUIRED FOR OPERATIONAL AND FLEET SUPPORT ACTIVITIES

DESIG/	PNEC/SNEC	PFYs		CFY03		FY04		FY05		FY06		FY07	
RATING	PMOS/SMOS	OFF	ENL	OFF	ENL	OFF	ENL	OFF	ENL	OFF	ENL	OFF	ENL
AD1	6423		4		0		0		0		0		0
AD1	6426		3		0		0		0		0		0
AD1	6426 6419		2		0		0		0		0		0
AD1	6518 6403		1		0		0		0		0		0
AD1	8241		1		0		0		0		0		0
AD1	8312		2		0		0		0		0		0
AD1	8319		10		0		0		0		0		0
AD1	8319 9502		1		0		0		0		0		0
AD2			14		0		0		0		0		0
AD2	6403		6		0		0		0		0		0
AD2	6415		2		0		0		0		0		0
AD2	6416		1		0		0		0		0		0
AD2	6418		72		0		0		0		0		0
AD2	6419		8		0		0		0		0		0
AD2	6419 6426		1		0		0		0		0		0
AD2	6420		3		0		0		0		0		0
AD2	6421		6		0		0		0		0		0
AD2	6422		17		0		0		0		0		0
AD2	6423		8		0		0		0		0		0
AD2	6426		5		0		0		0		0		0
AD2	6428		1		0		0		0		0		0
AD2	8241		2		0		0		0		0		0
AD2	8251 8319		2		0		0		0		0		0
AD2	8312		2		0		0		0		0		0
AD2	8319		9		0		0		0		0		0
AD3			19		0		0		0		0		0
AD3	6415		2		0		0		0		0		0
AD3	6416		2		0		0		0		0		0
AD3	6418		69		0		0		0		0		0
AD3	6419		2		0		0		0		0		0
AD3	6420		4		0		0		0		0		0
AD3	6421		10		0		0		0		0		0
AD3	6422		8		0		0		0		0		0
AD3	6423		3		0		0		0		0		0
AD3	6426		7		0		0		0		0		0
AD3	6426 6419		1		0		0		0		0		0
AD3	6428		1		0		0		0		0		0
AD3	8241 8819		1		0		0		0		0		0
AD3	8312		2		0		0		0		0		0
AD3	8819		10		0		0		0		0		0
ADAN			2		0		0		0		0		0
ADAN	6418		18		0		0		0		0		0
ADAN	6423		3		0		0		0		0		0
ADAN	8819		10		0		0		0		0		0
AECS			3		0		0		0		0		0
AEC			12		0		0		0		0		0
AEC	7133		1		0		0		0		0		0
AEC	8251		1		0		0		0		0		0

II.A.1.c. TOTAL BILLETS REQUIRED FOR OPERATIONAL AND FLEET SUPPORT ACTIVITIES

DESIG/ RATING	PNEC/SNEC PMOS/SMOS		PFYs OFF	PFYs ENL	CFY03 OFF	CFY03 ENL	FY04 OFF	FY04 ENL	FY05 OFF	FY05 ENL	FY06 OFF	FY06 ENL	FY07 OFF	FY07 ENL
AEC	8251	7182		1		0		0		0		0		0
AEC	8319			2		0		0		0		0		0
AE1				2		0		0		0		0		0
AE1		9588		1		0		0		0		0		0
AE1	6701			2		0		0		0		0		0
AE1	7131			3		0		0		0		0		0
AE1	7136			1		0		0		0		0		0
AE1	7137			6		0		0		0		0		0
AE1	7144			2		0		0		0		0		0
AE1	7175			6		0		0		0		0		0
AE1	7175	7131		1		0		0		0		0		0
AE1	7175	7136		1		0		0		0		0		0
AE1	7175	9526		1		0		0		0		0		0
AE1	7197			1		0		0		0		0		0
AE1	8241	7182		1		0		0		0		0		0
AE1	8251			2		0		0		0		0		0
AE1	8251	7182		1		0		0		0		0		0
AE1	8251	9502		1		0		0		0		0		0
AE1	8319			5		0		0		0		0		0
AE1	8319	9502		1		0		0		0		0		0
AE2				11		0		0		0		0		0
AE2		9526		3		0		0		0		0		0
AE2		9527		1		0		0		0		0		0
AE2	7105			3		0		0		0		0		0
AE2	7105	7133		1		0		0		0		0		0
AE2	7131			9		0		0		0		0		0
AE2	7136			5		0		0		0		0		0
AE2	7137			10		0		0		0		0		0
AE2	7137	9526		4		0		0		0		0		0
AE2	7137	9527		2		0		0		0		0		0
AE2	7144			2		0		0		0		0		0
AE2	7144	9527		1		0		0		0		0		0
AE2	7173			1		0		0		0		0		0
AE2	7175			8		0		0		0		0		0
AE2	7175	9526		1		0		0		0		0		0
AE2	7197			4		0		0		0		0		0
AE2	7197	9527		1		0		0		0		0		0
AE2	7232	9595		1		0		0		0		0		0
AE2	8241	7182		1		0		0		0		0		0
AE2	8251	7182		2		0		0		0		0		0
AE2	8312			3		0		0		0		0		0
AE2	8319			5		0		0		0		0		0
AE3				14		0		0		0		0		0
AE3		9527		1		0		0		0		0		0
AE3	7105			3		0		0		0		0		0
AE3	7105	7133		5		0		0		0		0		0
AE3	7131			11		0		0		0		0		0
AE3	7136			6		0		0		0		0		0

II.A.1.c. TOTAL BILLETS REQUIRED FOR OPERATIONAL AND FLEET SUPPORT ACTIVITIES

DESIG/	PNEC/SNEC		PFYs		CFY03		FY04		FY05		FY06		FY07	
RATING	PMOS/SMOS		OFF	ENL	OFF	ENL	OFF	ENL	OFF	ENL	OFF	ENL	OFF	ENL
AE3	7137			14		0		0		0		0		0
AE3	7137	9527		2		0		0		0		0		0
AE3	7144			8		0		0		0		0		0
AE3	7173			1		0		0		0		0		0
AE3	7175			5		0		0		0		0		0
AE3	7197			7		0		0		0		0		0
AE3	8312			1		0		0		0		0		0
AE3	8319			6		0		0		0		0		0
AEAN				6		0		0		0		0		0
AEAN	7131			7		0		0		0		0		0
AEAN	7137			1		0		0		0		0		0
AEAN	7144			1		0		0		0		0		0
AEAN	7182			1		0		0		0		0		0
AEAN	8819			7		0		0		0		0		0
AFCM				2		0		0		0		0		0
AFCM	8300			3		0		0		0		0		0
AK1				8		0		0		0		0		0
AK1		9590		2		0		0		0		0		0
AK1	8012			10		0		0		0		0		0
AK2				33		0		0		0		0		0
AK2		9590		6		0		0		0		0		0
AK2		9595		6		0		0		0		0		0
AK2	8012			3		0		0		0		0		0
AK2	8012	8013		1		0		0		0		0		0
AK2	8012	9590		1		0		0		0		0		0
AK2	8012	9595		1		0		0		0		0		0
AK3				29		0		0		0		0		0
AKAN				3		0		0		0		0		0
AMCS				7		0		0		0		0		0
AMC				7		0		0		0		0		0
AMC	7212			3		0		0		0		0		0
AMC	7225			1		0		0		0		0		0
AMC	7232			3		0		0		0		0		0
AMC	8319			7		0		0		0		0		0
AMC	8319	9502		1		0		0		0		0		0
AM1				7		0		0		0		0		0
AM1		9595		5		0		0		0		0		0
AM1	7212			8		0		0		0		0		0
AM1	7212	9571		1		0		0		0		0		0
AM1	7213			1		0		0		0		0		0
AM1	7222			3		0		0		0		0		0
AM1	7222	7232		1		0		0		0		0		0
AM1	7225			12		0		0		0		0		0
AM1	7225	9571		1		0		0		0		0		0
AM1	7226			5		0		0		0		0		0
AM1	7227			1		0		0		0		0		0
AM1	7232			12		0		0		0		0		0
AM1	8251	8319		2		0		0		0		0		0

II.A.1.c. TOTAL BILLETS REQUIRED FOR OPERATIONAL AND FLEET SUPPORT ACTIVITIES

DESIG/	PNEC/SNEC		PFYs		CFY03		FY04		FY05		FY06		FY07	
RATING	PMOS/SMOS		OFF	ENL	OFF	ENL	OFF	ENL	OFF	ENL	OFF	ENL	OFF	ENL
AM1	8310	9502		1		0		0		0		0		0
AM1	8319			13		0		0		0		0		0
AM2				12		0		0		0		0		0
AM2		9595		4		0		0		0		0		0
AM2	7212			5		0		0		0		0		0
AM2	7213			4		0		0		0		0		0
AM2	7222			16		0		0		0		0		0
AM2	7222	7232		2		0		0		0		0		0
AM2	7225			13		0		0		0		0		0
AM2	7225	7232		1		0		0		0		0		0
AM2	7226			6		0		0		0		0		0
AM2	7227			1		0		0		0		0		0
AM2	7232			20		0		0		0		0		0
AM2	7232	7222		2		0		0		0		0		0
AM2	8241			1		0		0		0		0		0
AM2	8251	8319		1		0		0		0		0		0
AM2	8312			1		0		0		0		0		0
AM2	8319			12		0		0		0		0		0
AM3				19		0		0		0		0		0
AM3	7212			2		0		0		0		0		0
AM3	7213			6		0		0		0		0		0
AM3	7222			12		0		0		0		0		0
AM3	7225			5		0		0		0		0		0
AM3	7225	7232		1		0		0		0		0		0
AM3	7226			4		0		0		0		0		0
AM3	7227			1		0		0		0		0		0
AM3	7232			31		0		0		0		0		0
AM3	8312			1		0		0		0		0		0
AM3	8819			12		0		0		0		0		0
AMAN				6		0		0		0		0		0
AMAN	7212			2		0		0		0		0		0
AMAN	7226			1		0		0		0		0		0
AMAN	7232			3		0		0		0		0		0
AMAN	8819			9		0		0		0		0		0
AMEC				1		0		0		0		0		0
AMEC	8319			2		0		0		0		0		0
AME1				1		0		0		0		0		0
AME1		9571		1		0		0		0		0		0
AME1	8319			3		0		0		0		0		0
AME1	8332			1		0		0		0		0		0
AME2				4		0		0		0		0		0
AME2	8319			5		0		0		0		0		0
AME3	8319			7		0		0		0		0		0
AMEAN	8319			2		0		0		0		0		0
AOC				3		0		0		0		0		0
AOC	6802			1		0		0		0		0		0
AOC	8319			6		0		0		0		0		0
AOC	8319	9502		1		0		0		0		0		0

II.A.1.c. TOTAL BILLETS REQUIRED FOR OPERATIONAL AND FLEET SUPPORT ACTIVITIES

DESIG/	PNEC/SNEC		PFYs		CFY03		FY04		FY05		FY06		FY07	
RATING	PMOS/SMOS		OFF	ENL	OFF	ENL	OFF	ENL	OFF	ENL	OFF	ENL	OFF	ENL
AO1				5		0		0		0		0		0
AO1	6802			14		0		0		0		0		0
AO1	6802	0812		1		0		0		0		0		0
AO1	6810			1		0		0		0		0		0
AO1	8319	0812		5		0		0		0		0		0
AO1	8319	9502		2		0		0		0		0		0
AO2				6		0		0		0		0		0
AO2	0812			1		0		0		0		0		0
AO2	6802			15		0		0		0		0		0
AO2	6810			1		0		0		0		0		0
AO2	8319			1		0		0		0		0		0
AO2	8319	9502		3		0		0		0		0		0
AO3				3		0		0		0		0		0
AO3	6802			18		0		0		0		0		0
AOAN				1		0		0		0		0		0
AOAN	6802			1		0		0		0		0		0
APOCM				5		0		0		0		0		0
APOCM		9580		2		0		0		0		0		0
APOCM	8300			9		0		0		0		0		0
APOCS				13		0		0		0		0		0
APOCS	8800			4		0		0		0		0		0
APOC				6		0		0		0		0		0
APOC	8251			5		0		0		0		0		0
APOC	8284			2		0		0		0		0		0
APOC	8319			1		0		0		0		0		0
APOC	8319	8800		4		0		0		0		0		0
APO1				10		0		0		0		0		0
APO1		9526		4		0		0		0		0		0
APO1		9527		1		0		0		0		0		0
APO1		9588		1		0		0		0		0		0
APO1		9590		1		0		0		0		0		0
APO1		9595		2		0		0		0		0		0
APO1	8251			4		0		0		0		0		0
APO1	8251	9502		2		0		0		0		0		0
APO1	8284			3		0		0		0		0		0
APO1	8319			2		0		0		0		0		0
APO2				9		0		0		0		0		0
APO2		9526		5		0		0		0		0		0
APO2	6673	9526		1		0		0		0		0		0
APO2	6673	9527		1		0		0		0		0		0
APO2	8201			2		0		0		0		0		0
APO2	8251			11		0		0		0		0		0
APO2	8284			7		0		0		0		0		0
APO3				3		0		0		0		0		0
APO3	6673	9526		1		0		0		0		0		0
APO3	8284			2		0		0		0		0		0
ASCS	7609			7		0		0		0		0		0
ASC				3		0		0		0		0		0

II.A.1.c. TOTAL BILLETS REQUIRED FOR OPERATIONAL AND FLEET SUPPORT ACTIVITIES

DESIG/ RATING	PNEC/SNEC PMOS/SMOS		PFYs OFF	PFYs ENL	CFY03 OFF	CFY03 ENL	FY04 OFF	FY04 ENL	FY05 OFF	FY05 ENL	FY06 OFF	FY06 ENL	FY07 OFF	FY07 ENL
ASC	7609			14		0		0		0		0		0
AS1				3		0		0		0		0		0
AS1		9502		10		0		0		0		0		0
AS1		9590		3		0		0		0		0		0
AS1	7601			5		0		0		0		0		0
AS1	7606			4		0		0		0		0		0
AS1	7606	7222		1		0		0		0		0		0
AS1	7606	7616		1		0		0		0		0		0
AS1	7607			1		0		0		0		0		0
AS1	7609			22		0		0		0		0		0
AS1	7609	7607		1		0		0		0		0		0
AS1	7609	7612		10		0		0		0		0		0
AS1	7609	7614		1		0		0		0		0		0
AS1	7612			2		0		0		0		0		0
AS1	7612	7222		1		0		0		0		0		0
AS1	7614			6		0		0		0		0		0
AS2				7		0		0		0		0		0
AS2		9502		5		0		0		0		0		0
AS2		9503		1		0		0		0		0		0
AS2		9590		2		0		0		0		0		0
AS2		9595		4		0		0		0		0		0
AS2	7222			4		0		0		0		0		0
AS2	7601			7		0		0		0		0		0
AS2	7603			8		0		0		0		0		0
AS2	7606			12		0		0		0		0		0
AS2	7606	7222		1		0		0		0		0		0
AS2	7606	7607		3		0		0		0		0		0
AS2	7606	7614		1		0		0		0		0		0
AS2	7607			13		0		0		0		0		0
AS2	7607	7612		1		0		0		0		0		0
AS2	7607	7614		1		0		0		0		0		0
AS2	7609			4		0		0		0		0		0
AS2	7609	7607		1		0		0		0		0		0
AS2	7610			1		0		0		0		0		0
AS2	7612			19		0		0		0		0		0
AS2	7612	7222		3		0		0		0		0		0
AS2	7612	7614		1		0		0		0		0		0
AS2	7613	7616		1		0		0		0		0		0
AS2	7614			31		0		0		0		0		0
AS2	7614	7603		1		0		0		0		0		0
AS2	7614	7607		3		0		0		0		0		0
AS2	7614	7609		1		0		0		0		0		0
AS2	7614	7612		1		0		0		0		0		0
AS2	7614	7616		1		0		0		0		0		0
AS2	7614	9527		1		0		0		0		0		0
AS2	7616			4		0		0		0		0		0
AS3				7		0		0		0		0		0
AS3	7222			1		0		0		0		0		0

II.A.1.c. TOTAL BILLETS REQUIRED FOR OPERATIONAL AND FLEET SUPPORT ACTIVITIES

DESIG/ RATING	PNEC/SNEC PMOS/SMOS		PFYs OFF	PFYs ENL	CFY03 OFF	CFY03 ENL	FY04 OFF	FY04 ENL	FY05 OFF	FY05 ENL	FY06 OFF	FY06 ENL	FY07 OFF	FY07 ENL
AS3	7601			7		0		0		0		0		0
AS3	7603			8		0		0		0		0		0
AS3	7606			18		0		0		0		0		0
AS3	7606	7607		4		0		0		0		0		0
AS3	7607			18		0		0		0		0		0
AS3	7607	6712		1		0		0		0		0		0
AS3	7607	7222		1		0		0		0		0		0
AS3	7607	7601		1		0		0		0		0		0
AS3	7607	7606		2		0		0		0		0		0
AS3	7610			1		0		0		0		0		0
AS3	7612			22		0		0		0		0		0
AS3	7612	7222		1		0		0		0		0		0
AS3	7612	7614		1		0		0		0		0		0
AS3	7614			25		0		0		0		0		0
AS3	7614	7603		1		0		0		0		0		0
AS3	7616			2		0		0		0		0		0
ASAN				17		0		0		0		0		0
ASAN	7601			1		0		0		0		0		0
ASAN	7603			2		0		0		0		0		0
ASAN	7606			2		0		0		0		0		0
ASAN	7606	7614		1		0		0		0		0		0
ASAN	7607			7		0		0		0		0		0
ASAN	7612			5		0		0		0		0		0
ASAN	7614			5		0		0		0		0		0
ATCS				12		0		0		0		0		0
ATC				34		0		0		0		0		0
ATC	6635			1		0		0		0		0		0
ATC	6640	9502		1		0		0		0		0		0
ATC	6647			1		0		0		0		0		0
ATC	6664			1		0		0		0		0		0
ATC	8262			3		0		0		0		0		0
ATC	8262	9402		1		0		0		0		0		0
ATC	8284			1		0		0		0		0		0
ATC	8319			5		0		0		0		0		0
ATC	9402			2		0		0		0		0		0
AT1				8		0		0		0		0		0
AT1		9502		1		0		0		0		0		0
AT1		9503		9		0		0		0		0		0
AT1		9526		4		0		0		0		0		0
AT1		9590		2		0		0		0		0		0
AT1	6526			2		0		0		0		0		0
AT1	6527			1		0		0		0		0		0
AT1	6529			1		0		0		0		0		0
AT1	6534	9503		1		0		0		0		0		0
AT1	6605			1		0		0		0		0		0
AT1	6609			2		0		0		0		0		0
AT1	6611			6		0		0		0		0		0
AT1	6611	6613		1		0		0		0		0		0

II.A.1.c. TOTAL BILLETS REQUIRED FOR OPERATIONAL AND FLEET SUPPORT ACTIVITIES

DESIG/	PNEC/SNEC		PFYs		CFY03		FY04		FY05		FY06		FY07	
RATING	PMOS/SMOS		OFF	ENL	OFF	ENL	OFF	ENL	OFF	ENL	OFF	ENL	OFF	ENL
AT1	6612			4		0		0		0		0		0
AT1	6612	6609		1		0		0		0		0		0
AT1	6614			1		0		0		0		0		0
AT1	6615			2		0		0		0		0		0
AT1	6615	9503		1		0		0		0		0		0
AT1	6628			1		0		0		0		0		0
AT1	6633			2		0		0		0		0		0
AT1	6634			3		0		0		0		0		0
AT1	6635			1		0		0		0		0		0
AT1	6635	9526		2		0		0		0		0		0
AT1	6640	9502		1		0		0		0		0		0
AT1	6647			1		0		0		0		0		0
AT1	6664			6		0		0		0		0		0
AT1	6673			1		0		0		0		0		0
AT1	6686			1		0		0		0		0		0
AT1	6689			2		0		0		0		0		0
AT1	6695			2		0		0		0		0		0
AT1	6701			1		0		0		0		0		0
AT1	6701	9595		1		0		0		0		0		0
AT1	6704			1		0		0		0		0		0
AT1	6705			5		0		0		0		0		0
AT1	6710			3		0		0		0		0		0
AT1	6713			1		0		0		0		0		0
AT1	6717			3		0		0		0		0		0
AT1	6717	9526		1		0		0		0		0		0
AT1	6718			5		0		0		0		0		0
AT1	6721			8		0		0		0		0		0
AT1	8262			6		0		0		0		0		0
AT1	8265			2		0		0		0		0		0
AT1	8284			3		0		0		0		0		0
AT1	8319			8		0		0		0		0		0
AT1	8319	6701		1		0		0		0		0		0
AT1	8319	9502		1		0		0		0		0		0
AT1	9402			5		0		0		0		0		0
AT1	9402	8263		1		0		0		0		0		0
AT2				10		0		0		0		0		0
AT2		9526		4		0		0		0		0		0
AT2		9527		2		0		0		0		0		0
AT2	6526			4		0		0		0		0		0
AT2	6527			1		0		0		0		0		0
AT2	6529			6		0		0		0		0		0
AT2	6534			3		0		0		0		0		0
AT2	6582			2		0		0		0		0		0
AT2	6605			5		0		0		0		0		0
AT2	6605	6606		1		0		0		0		0		0
AT2	6605	9527		1		0		0		0		0		0
AT2	6606			2		0		0		0		0		0
AT2	6606	6710		1		0		0		0		0		0

II.A.1.c. TOTAL BILLETS REQUIRED FOR OPERATIONAL AND FLEET SUPPORT ACTIVITIES

DESIG/ RATING	PNEC/SNEC PMOS/SMOS	PFYs OFF	PFYs ENL	CFY03 OFF	CFY03 ENL	FY04 OFF	FY04 ENL	FY05 OFF	FY05 ENL	FY06 OFF	FY06 ENL	FY07 OFF	FY07 ENL
AT2	6607		2		0		0		0		0		0
AT2	6609		5		0		0		0		0		0
AT2	6609 9527		1		0		0		0		0		0
AT2	6610 9502		1		0		0		0		0		0
AT2	6611		7		0		0		0		0		0
AT2	6611 6613		1		0		0		0		0		0
AT2	6612		7		0		0		0		0		0
AT2	6612 6710		4		0		0		0		0		0
AT2	6613		2		0		0		0		0		0
AT2	6614		1		0		0		0		0		0
AT2	6615		6		0		0		0		0		0
AT2	6617 9527		1		0		0		0		0		0
AT2	6618 9527		3		0		0		0		0		0
AT2	6629		2		0		0		0		0		0
AT2	6631		3		0		0		0		0		0
AT2	6633		8		0		0		0		0		0
AT2	6634		1		0		0		0		0		0
AT2	6634 6635		1		0		0		0		0		0
AT2	6635 9527		2		0		0		0		0		0
AT2	6639		4		0		0		0		0		0
AT2	6647		3		0		0		0		0		0
AT2	6648		3		0		0		0		0		0
AT2	6664		7		0		0		0		0		0
AT2	6664 9526		1		0		0		0		0		0
AT2	6673		9		0		0		0		0		0
AT2	6673 9526		1		0		0		0		0		0
AT2	6680		2		0		0		0		0		0
AT2	6684		2		0		0		0		0		0
AT2	6686		3		0		0		0		0		0
AT2	6688		3		0		0		0		0		0
AT2	6689		4		0		0		0		0		0
AT2	6694		3		0		0		0		0		0
AT2	6695		1		0		0		0		0		0
AT2	6704		15		0		0		0		0		0
AT2	6705		2		0		0		0		0		0
AT2	6705 9527		2		0		0		0		0		0
AT2	6710		3		0		0		0		0		0
AT2	6713		1		0		0		0		0		0
AT2	6716		7		0		0		0		0		0
AT2	6716 9527		1		0		0		0		0		0
AT2	6717		13		0		0		0		0		0
AT2	6717 6609		1		0		0		0		0		0
AT2	6717 6611		1		0		0		0		0		0
AT2	6718		13		0		0		0		0		0
AT2	6718 9526		3		0		0		0		0		0
AT2	6721		13		0		0		0		0		0
AT2	6721 9527		1		0		0		0		0		0
AT2	8262		18		0		0		0		0		0

II.A.1.c. TOTAL BILLETS REQUIRED FOR OPERATIONAL AND FLEET SUPPORT ACTIVITIES

DESIG/ RATING	PNEC/SNEC PMOS/SMOS		PFYs OFF	PFYs ENL	CFY03 OFF	CFY03 ENL	FY04 OFF	FY04 ENL	FY05 OFF	FY05 ENL	FY06 OFF	FY06 ENL	FY07 OFF	FY07 ENL
AT2	8262	9502		1		0		0		0		0		0
AT2	8265			1		0		0		0		0		0
AT2	8284			9		0		0		0		0		0
AT2	8319			6		0		0		0		0		0
AT2	9402			11		0		0		0		0		0
AT2	9402	9502		1		0		0		0		0		0
AT3				6		0		0		0		0		0
AT3		9526		3		0		0		0		0		0
AT3		9527		4		0		0		0		0		0
AT3	6526			3		0		0		0		0		0
AT3	6526	9527		1		0		0		0		0		0
AT3	6527			1		0		0		0		0		0
AT3	6527	9527		1		0		0		0		0		0
AT3	6529			3		0		0		0		0		0
AT3	6534			1		0		0		0		0		0
AT3	6534	9527		2		0		0		0		0		0
AT3	6535	9527		1		0		0		0		0		0
AT3	6605			4		0		0		0		0		0
AT3	6605	9527		1		0		0		0		0		0
AT3	6606			2		0		0		0		0		0
AT3	6606	6605		1		0		0		0		0		0
AT3	6607			1		0		0		0		0		0
AT3	6609			13		0		0		0		0		0
AT3	6611			4		0		0		0		0		0
AT3	6611	6613		6		0		0		0		0		0
AT3	6611	9527		1		0		0		0		0		0
AT3	6612			13		0		0		0		0		0
AT3	6613			4		0		0		0		0		0
AT3	6614			2		0		0		0		0		0
AT3	6615			2		0		0		0		0		0
AT3	6615	9527		1		0		0		0		0		0
AT3	6618			2		0		0		0		0		0
AT3	6619			4		0		0		0		0		0
AT3	6633			6		0		0		0		0		0
AT3	6634			6		0		0		0		0		0
AT3	6634	6529		3		0		0		0		0		0
AT3	6634	9527		1		0		0		0		0		0
AT3	6639			3		0		0		0		0		0
AT3	6647			6		0		0		0		0		0
AT3	6648			5		0		0		0		0		0
AT3	6664			4		0		0		0		0		0
AT3	6673			19		0		0		0		0		0
AT3	6673	9526		1		0		0		0		0		0
AT3	6673	9527		1		0		0		0		0		0
AT3	6680			8		0		0		0		0		0
AT3	6686			3		0		0		0		0		0
AT3	6688			4		0		0		0		0		0
AT3	6694	9527		1		0		0		0		0		0

II.A.1.c. TOTAL BILLETS REQUIRED FOR OPERATIONAL AND FLEET SUPPORT ACTIVITIES

DESIG/	PNEC/SNEC		PFYs		CFY03		FY04		FY05		FY06		FY07	
RATING	PMOS/SMOS		OFF	ENL	OFF	ENL	OFF	ENL	OFF	ENL	OFF	ENL	OFF	ENL
AT3	6704			25		0		0		0		0		0
AT3	6710			6		0		0		0		0		0
AT3	6710	6612		1		0		0		0		0		0
AT3	6713			1		0		0		0		0		0
AT3	6715			1		0		0		0		0		0
AT3	6716			5		0		0		0		0		0
AT3	6716	9527		2		0		0		0		0		0
AT3	6717			19		0		0		0		0		0
AT3	6717	9527		3		0		0		0		0		0
AT3	8262			1		0		0		0		0		0
AT3	8265			1		0		0		0		0		0
AT3	8284			3		0		0		0		0		0
AT3	8819			4		0		0		0		0		0
AT3	9402			5		0		0		0		0		0
ATAN				1		0		0		0		0		0
ATAN	6527			1		0		0		0		0		0
ATAN	6605			1		0		0		0		0		0
ATAN	6605	6710		2		0		0		0		0		0
ATAN	6606			1		0		0		0		0		0
ATAN	6609			2		0		0		0		0		0
ATAN	6609	6717		3		0		0		0		0		0
ATAN	6611			4		0		0		0		0		0
ATAN	6612			2		0		0		0		0		0
ATAN	6612	6710		1		0		0		0		0		0
ATAN	6613			2		0		0		0		0		0
ATAN	6614			1		0		0		0		0		0
ATAN	6634			1		0		0		0		0		0
ATAN	6673			4		0		0		0		0		0
ATAN	6686			1		0		0		0		0		0
ATAN	6704			4		0		0		0		0		0
ATAN	6710			3		0		0		0		0		0
ATAN	6715			1		0		0		0		0		0
ATAN	6716			2		0		0		0		0		0
ATAN	6717			6		0		0		0		0		0
ATAN	8819			8		0		0		0		0		0
AVCM				2		0		0		0		0		0
AVCM	8300			3		0		0		0		0		0
AWCS				1		0		0		0		0		0
AWCS	7841			1		0		0		0		0		0
AWCS	7861	9502		1		0		0		0		0		0
AWC	7836	7841		4		0		0		0		0		0
AWC	7841			5		0		0		0		0		0
AWC	7841	7861		1		0		0		0		0		0
AWC	7841	9502		4		0		0		0		0		0
AWC	7861			3		0		0		0		0		0
AW1	7821			2		0		0		0		0		0
AW1	7821	9502		1		0		0		0		0		0
AW1	7835	7841		3		0		0		0		0		0

II.A.1.c. TOTAL BILLETS REQUIRED FOR OPERATIONAL AND FLEET SUPPORT ACTIVITIES

DESIG/	PNEC/SNEC		PFYs		CFY03		FY04		FY05		FY06		FY07	
RATING	PMOS/SMOS		OFF	ENL	OFF	ENL	OFF	ENL	OFF	ENL	OFF	ENL	OFF	ENL
AW1	7835	7861		3		0		0		0		0		0
AW1	7841			4		0		0		0		0		0
AW1	7841	9502		7		0		0		0		0		0
AW1	7861			1		0		0		0		0		0
AW1	7861	9502		6		0		0		0		0		0
AW2	7835	7841		2		0		0		0		0		0
AW2	7835	7861		2		0		0		0		0		0
AW2	7841			3		0		0		0		0		0
AW2	7841	9502		3		0		0		0		0		0
AW2	7861	9502		2		0		0		0		0		0
AW3	7841			2		0		0		0		0		0
AWAN	7841			1		0		0		0		0		0
AZC				10		0		0		0		0		0
AZC	6314			1		0		0		0		0		0
AZC	6315			3		0		0		0		0		0
AZ1				27		0		0		0		0		0
AZ1	6314			10		0		0		0		0		0
AZ1	6315			3		0		0		0		0		0
AZ2				83		0		0		0		0		0
AZ2	6303			2		0		0		0		0		0
AZ2	6314			7		0		0		0		0		0
AZ3				61		0		0		0		0		0
AZ3	6301			1		0		0		0		0		0
AZAN				6		0		0		0		0		0
CTAC	9190			1		0		0		0		0		0
CTA1		9190		1		0		0		0		0		0
CTA1	9190			1		0		0		0		0		0
CTO1				1		0		0		0		0		0
CTT1	9102	8295		1		0		0		0		0		0
DK2				1		0		0		0		0		0
DK2	2905			1		0		0		0		0		0
DM2				1		0		0		0		0		0
ETC	1685	9512		1		0		0		0		0		0
ET2				2		0		0		0		0		0
ET2	1613	2750		1		0		0		0		0		0
ET2	1677			3		0		0		0		0		0
ET2	2750			1		0		0		0		0		0
ET3	1677			1		0		0		0		0		0
FC3	1677			1		0		0		0		0		0
HM2	8406			2		0		0		0		0		0
ISC	3910			3		0		0		0		0		0
IS1	3910	3924		3		0		0		0		0		0
IS1	3924			8		0		0		0		0		0
IS2				3		0		0		0		0		0
IS2	3905			1		0		0		0		0		0
IS3				1		0		0		0		0		0
ITC	2735			2		0		0		0		0		0
IT1				1		0		0		0		0		0

II.A.1.c. TOTAL BILLETS REQUIRED FOR OPERATIONAL AND FLEET SUPPORT ACTIVITIES

DESIG/	PNEC/SNEC	PFYs	CFY03	FY04	FY05	FY06	FY07
RATING	PMOS/SMOS	OFF ENL	OFF ENL	OFF ENL	OFF ENL	OFF ENL	OFF ENL
IT1	2735	4	0	0	0	0	0
IT1	2781	1	0	0	0	0	0
IT2		2	0	0	0	0	0
IT2	2735	6	0	0	0	0	0
IT2	2780	1	0	0	0	0	0
IT3		1	0	0	0	0	0
IT3	2735	1	0	0	0	0	0
LN1		1	0	0	0	0	0
MMC		1	0	0	0	0	0
MM1	4201	1	0	0	0	0	0
MM1	4283	1	0	0	0	0	0
MM2	4201	3	0	0	0	0	0
MM2	4283	3	0	0	0	0	0
MM3	4201	4	0	0	0	0	0
MM3	4283	2	0	0	0	0	0
MR1		3	0	0	0	0	0
MR1	4402	2	0	0	0	0	0
MR2		5	0	0	0	0	0
MR2	4402	2	0	0	0	0	0
MR2	4404	1	0	0	0	0	0
MR3		4	0	0	0	0	0
NCC		4	0	0	0	0	0
NC1		4	0	0	0	0	0
OSC		1	0	0	0	0	0
PH1	8288	4	0	0	0	0	0
PH2	8143	1	0	0	0	0	0
PH2	8193	1	0	0	0	0	0
PH2	8288	4	0	0	0	0	0
PH3	8288	1	0	0	0	0	0
PHAN	8288	1	0	0	0	0	0
PNC		1	0	0	0	0	0
PN1		2	0	0	0	0	0
PN2		3	0	0	0	0	0
PN3		2	0	0	0	0	0
PNSN		1	0	0	0	0	0
POCM	9580	4	0	0	0	0	0
POC	9515	1	0	0	0	0	0
POC	9519	1	0	0	0	0	0
PO1	9571	1	0	0	0	0	0
PO1	9595	1	0	0	0	0	0
PO1	6673	2	0	0	0	0	0
PO2	6673	3	0	0	0	0	0
PO2	6673 9526	2	0	0	0	0	0
PO2	6718	7	0	0	0	0	0
PO3		2	0	0	0	0	0
PO3	6673	4	0	0	0	0	0
PRCS		2	0	0	0	0	0
PRC		5	0	0	0	0	0

II.A.1.c. TOTAL BILLETS REQUIRED FOR OPERATIONAL AND FLEET SUPPORT ACTIVITIES

DESIG/ RATING	PNEC/SNEC PMOS/SMOS	PFYs OFF	PFYs ENL	CFY03 OFF	CFY03 ENL	FY04 OFF	FY04 ENL	FY05 OFF	FY05 ENL	FY06 OFF	FY06 ENL	FY07 OFF	FY07 ENL
PR1			22		0		0		0		0		0
PR1	7356		12		0		0		0		0		0
PR2			25		0		0		0		0		0
PR2	7356		18		0		0		0		0		0
PR3			29		0		0		0		0		0
PR3	7356		5		0		0		0		0		0
PRAN			7		0		0		0		0		0
SKCS			1		0		0		0		0		0
SKC			4		0		0		0		0		0
SKC	8012		5		0		0		0		0		0
TM2			1		0		0		0		0		0
TM3			1		0		0		0		0		0
YNCM			1		0		0		0		0		0
YNCS	2514		1		0		0		0		0		0
YNC			6		0		0		0		0		0
YNC	9588		1		0		0		0		0		0
YN1			3		0		0		0		0		0
YN2			11		0		0		0		0		0
YN3			7		0		0		0		0		0
YNSN			5		0		0		0		0		0
AN			28		0		0		0		0		0
USN FLEET SUPPORT ACTIVITIES - TAR													
1302		11		0		0		0		0		0	
1312		1		0		0		0		0		0	
1320		1		0		0		0		0		0	
1520		1		0		0		0		0		0	
ADC	8251 8319		1		0		0		0		0		0
AEC	8319		1		0		0		0		0		0
AK2			3		0		0		0		0		0
AMC			1		0		0		0		0		0
AMC	8319		1		0		0		0		0		0
AM2	7212		3		0		0		0		0		0
AMEC	8319		1		0		0		0		0		0
AOCS	8271		2		0		0		0		0		0
APOCM	9580		1		0		0		0		0		0
APOCM	8300		1		0		0		0		0		0
ATCS	8262		1		0		0		0		0		0
ATCS	8263		1		0		0		0		0		0
ATC			1		0		0		0		0		0
AWCS	7821		1		0		0		0		0		0
AWCS	7861		1		0		0		0		0		0
AWC	7861		1		0		0		0		0		0
AW1	7821		1		0		0		0		0		0
AW2	7861		2		0		0		0		0		0
AZC	6315		1		0		0		0		0		0
AZ2			1		0		0		0		0		0
IT2	2750		1		0		0		0		0		0

II.A.1.c. TOTAL BILLETS REQUIRED FOR OPERATIONAL AND FLEET SUPPORT ACTIVITIES

DESIG/ RATING	PNEC/SNEC PMOS/SMOS	PFYs OFF	PFYs ENL	CFY03 OFF	CFY03 ENL	FY04 OFF	FY04 ENL	FY05 OFF	FY05 ENL	FY06 OFF	FY06 ENL	FY07 OFF	FY07 ENL
NC1			1		0		0		0		0		0
PNC			1		0		0		0		0		0
PN1			1		0		0		0		0		0
PN2			1		0		0		0		0		0
SKC			1		0		0		0		0		0
YNC			1		0		0		0		0		0
YN1			1		0		0		0		0		0
YN2			1		0		0		0		0		0
YN3			1		0		0		0		0		0
YNSN			1		0		0		0		0		0
USN FLEET SUPPORT ACTIVITIES - SELRES													
1000		2		0		0		0		0		0	
1302		16		0		0		0		0		0	
1310		2		0		0		0		0		0	
1320		5		0		0		0		0		0	
1520		3		0		0		0		0		0	
1630		4		0		0		0		0		0	
2100		1		0		0		0		0		0	
7340		1		0		0		0		0		0	
AD1			3		0		0		0		0		0
AD1	6418		4		0		0		0		0		0
AD2			22		0		0		0		0		0
AD2	6418		2		0		0		0		0		0
AD3			16		0		0		0		0		0
AD3	6418		1		0		0		0		0		0
AE1			1		0		0		0		0		0
AE1	7144		1		0		0		0		0		0
AE1	7175		1		0		0		0		0		0
AE2			3		0		0		0		0		0
AE2	7105		1		0		0		0		0		0
AE2	7105 7144		1		0		0		0		0		0
AE2	7136		2		0		0		0		0		0
AE2	7137		1		0		0		0		0		0
AE2	7175		2		0		0		0		0		0
AE3			1		0		0		0		0		0
AE3	7175		1		0		0		0		0		0
AK1			2		0		0		0		0		0
AK1	9590		3		0		0		0		0		0
AK2			4		0		0		0		0		0
AK2	9590		3		0		0		0		0		0
AK3			4		0		0		0		0		0
AM1			1		0		0		0		0		0
AM2			3		0		0		0		0		0
AM2	7212		3		0		0		0		0		0
AM2	7222		3		0		0		0		0		0
AM2	7225		3		0		0		0		0		0
AM3			6		0		0		0		0		0

II.A.1.c. TOTAL BILLETS REQUIRED FOR OPERATIONAL AND FLEET SUPPORT ACTIVITIES

DESIG/	PNEC/SNEC		PFYs		CFY03		FY04		FY05		FY06		FY07	
RATING	PMOS/SMOS		OFF	ENL	OFF	ENL	OFF	ENL	OFF	ENL	OFF	ENL	OFF	ENL
AO1				1		0		0		0		0		0
AO1	6802			6		0		0		0		0		0
AO2				2		0		0		0		0		0
AO2	6802			2		0		0		0		0		0
AO3				2		0		0		0		0		0
APOC				1		0		0		0		0		0
APO1				1		0		0		0		0		0
ASC				1		0		0		0		0		0
AS1				3		0		0		0		0		0
AS1	7609			4		0		0		0		0		0
AS2				13		0		0		0		0		0
AS2	7601			1		0		0		0		0		0
AS2	7607			1		0		0		0		0		0
AS2	7614			3		0		0		0		0		0
AS3				15		0		0		0		0		0
AS3	7601			1		0		0		0		0		0
AS3	7603			1		0		0		0		0		0
AS3	7606			2		0		0		0		0		0
AS3	7607			2		0		0		0		0		0
AS3	7614			1		0		0		0		0		0
ASAN	7603			2		0		0		0		0		0
ATC				1		0		0		0		0		0
AT1				3		0		0		0		0		0
AT1	6529			1		0		0		0		0		0
AT1	6606			1		0		0		0		0		0
AT1	6611			2		0		0		0		0		0
AT1	6615			1		0		0		0		0		0
AT1	6640	9502		1		0		0		0		0		0
AT1	6710			1		0		0		0		0		0
AT2				7		0		0		0		0		0
AT2		9526		4		0		0		0		0		0
AT2	6529			1		0		0		0		0		0
AT2	6534			1		0		0		0		0		0
AT2	6612			10		0		0		0		0		0
AT2	6615			1		0		0		0		0		0
AT2	6629			1		0		0		0		0		0
AT2	6664			2		0		0		0		0		0
AT2	6673			9		0		0		0		0		0
AT2	6688			1		0		0		0		0		0
AT2	6695			1		0		0		0		0		0
AT2	6710			1		0		0		0		0		0
AT2	6716			2		0		0		0		0		0
AT2	6717			2		0		0		0		0		0
AT2	6718			3		0		0		0		0		0
AT3				6		0		0		0		0		0
AT3	6529			2		0		0		0		0		0
AT3	6605			7		0		0		0		0		0
AT3	6673			1		0		0		0		0		0

II.A.1.c. TOTAL BILLETS REQUIRED FOR OPERATIONAL AND FLEET SUPPORT ACTIVITIES

DESIG/ RATING	PNEC/SNEC PMOS/SMOS	PFYs OFF	PFYs ENL	CFY03 OFF	CFY03 ENL	FY04 OFF	FY04 ENL	FY05 OFF	FY05 ENL	FY06 OFF	FY06 ENL	FY07 OFF	FY07 ENL
AT3	6694		1		0		0		0		0		0
AT3	6717		2		0		0		0		0		0
ATAN	6606		1		0		0		0		0		0
AWC			1		0		0		0		0		0
AZ1			2		0		0		0		0		0
AZ1	6315		1		0		0		0		0		0
AZ2			10		0		0		0		0		0
AZ3			8		0		0		0		0		0
ET1			1		0		0		0		0		0
IS1	3924		2		0		0		0		0		0
ITC	2735		1		0		0		0		0		0
OSC			1		0		0		0		0		0
PR1			3		0		0		0		0		0
PR2			14		0		0		0		0		0
PR3			3		0		0		0		0		0
SKC			2		0		0		0		0		0
YNC			1		0		0		0		0		0
YN1			2		0		0		0		0		0
YN2			3		0		0		0		0		0

SUMMARY TOTALS:

USN OPERATIONAL ACTIVITIES - ACDU	1220	5678	0	2	0	0	0	0	0	0	0	0
USN OPERATIONAL ACTIVITIES - TAR	108	866	0	0	0	0	0	0	0	0	0	0
USN OPERATIONAL ACTIVITIES - SELRES	417	1153	0	0	0	0	0	0	0	0	0	0
USN FLEET SUPPORT ACTIVITIES - ACDU	257	3162	0	0	0	0	0	0	0	0	0	0
USN FLEET SUPPORT ACTIVITIES - TAR	14	37	0	0	0	0	0	0	0	0	0	0
USN FLEET SUPPORT ACTIVITIES - SELRES	34	295	0	0	0	0	0	0	0	0	0	0

II.A.1.c. TOTAL BILLETS REQUIRED FOR OPERATIONAL AND FLEET SUPPORT ACTIVITIES

DESIG/ RATING	PNEC/SNEC PMOS/SMOS	PFYs OFF	PFYs ENL	CFY03 OFF	CFY03 ENL	FY04 OFF	FY04 ENL	FY05 OFF	FY05 ENL	FY06 OFF	FY06 ENL	FY07 OFF	FY07 ENL
GRAND TOTALS:													
USN - ACDU		1477	8840	0	2	0	0	0	0	0	0	0	0
USN - TAR		122	903	0	0	0	0	0	0	0	0	0	0
USN - SELRES		451	1448	0	0	0	0	0	0	0	0	0	0

II.A.2.a. OPERATIONAL AND FLEET SUPPORT ACTIVITY DEACTIVATION SCHEDULE

II.A.2.b. BILLETS TO BE DELETED FOR OPERATIONAL AND FLEET SUPPORT ACTIVITIES

ACTIVITY, UIC, PHASING INCREMENT	BILLETS OFF	BILLETS ENL	DESIG/ RATING	PNEC/ PMOS	SNEC/ SMOS
FLEET SUPPORT ACTIVITIES - USN					
Reserve Patrol Wing (Pacific), NAS Moffett Field, 09160, FY02 Increment					
TAR	0	1	ATCS	8262	
	0	1	AWCS	7861	
ACTIVITY TOTAL:	0	2			

II.A.2.c. TOTAL BILLETS TO BE DELETED IN OPERATIONAL AND FLEET SUPPORT ACTIVITIES

DESIG/ RATING	PNEC/SNEC PMOS/SMOS	PFYs OFF	PFYs ENL	CFY03 OFF	CFY03 ENL	FY04 OFF	FY04 ENL	FY05 OFF	FY05 ENL	FY06 OFF	FY06 ENL	FY07 OFF	FY07 ENL
USN FLEET SUPPORT ACTIVITIES - TAR													
ATCS	8262		-1		0		0		0		0		0
AWCS	7861		-1		0		0		0		0		0

SUMMARY TOTALS:

USN FLEET SUPPORT ACTIVITIES - TAR													
			-2		0		0		0		0		0

GRAND TOTALS:

USN - TAR													
			-2		0		0		0		0		0

II.A.3. TRAINING ACTIVITIES INSTRUCTOR AND SUPPORT BILLET REQUIREMENTS

TRAINING ACTIVITY, LOCATION, UIC: MTU 1011, NAMTRAU Jacksonville, 66051

INSTRUCTOR BILLETS

DESIG RATING	PNEC/SNEC PMOS/SMOS		PFYs OFF	PFYs ENL	CFY03 OFF	CFY03 ENL	FY04 OFF	FY04 ENL	FY05 OFF	FY05 ENL	FY06 OFF	FY06 ENL	FY07 OFF	FY07 ENL
USN														
ADC	6418	9502	0	1	0	1	0	1	0	1	0	1	0	1
ADC	8251	9502	0	1	0	1	0	1	0	1	0	1	0	1
ADC	8319	9502	0	1	0	1	0	1	0	1	0	1	0	1
AD1	6418	9502	0	3	0	3	0	3	0	3	0	3	0	3
AD1	8319	9502	0	1	0	1	0	1	0	1	0	1	0	1
AD2	6418	9502	0	1	0	1	0	1	0	1	0	1	0	1
AD2	8319	9502	0	2	0	2	0	2	0	2	0	2	0	2
AEC	8319	9502	0	2	0	2	0	2	0	2	0	2	0	2
AE1	7136	9502	0	2	0	2	0	2	0	2	0	2	0	2
AE1	7137	9502	0	1	0	1	0	1	0	1	0	1	0	1
AE1	8251	9502	0	1	0	1	0	1	0	1	0	1	0	1
AE1	8319	9502	0	1	0	1	0	1	0	1	0	1	0	1
AE2	7137	9502	0	2	0	2	0	2	0	2	0	2	0	2
AE2	8319	9502	0	1	0	1	0	1	0	1	0	1	0	1
AMC	8319	9502	0	1	0	1	0	1	0	1	0	1	0	1
AM1	8251	9502	0	1	0	1	0	1	0	1	0	1	0	1
AM1	8319	9502	0	1	0	1	0	1	0	1	0	1	0	1
AME1	8319	9502	0	2	0	2	0	2	0	2	0	2	0	2
AO1	8319	9502	0	1	0	1	0	1	0	1	0	1	0	1
AO2	8319	9502	0	1	0	1	0	1	0	1	0	1	0	1
ASC	7609	9502	0	1	0	1	0	1	0	1	0	1	0	1
AS1	7601	9502	0	2	0	2	0	2	0	2	0	2	0	2
AS1	7603	9502	0	1	0	1	0	1	0	1	0	1	0	1
AS1	7606	9502	0	1	0	1	0	1	0	1	0	1	0	1
AS1	7607	9502	0	1	0	1	0	1	0	1	0	1	0	1
AS1	7609	9502	0	1	0	1	0	1	0	1	0	1	0	1
AS1	7610	9502	0	1	0	1	0	1	0	1	0	1	0	1
AS1	7612	9502	0	1	0	1	0	1	0	1	0	1	0	1
AS1	7613	9502	0	1	0	1	0	1	0	1	0	1	0	1
AS1	7614	9502	0	3	0	3	0	3	0	3	0	3	0	3
AS2	7606	9502	0	1	0	1	0	1	0	1	0	1	0	1
AS2	7610	9502	0	1	0	1	0	1	0	1	0	1	0	1
AS2	7614	9527	0	1	0	1	0	1	0	1	0	1	0	1
ATCS	8262	9502	0	1	0	1	0	1	0	1	0	1	0	1
ATCS	9402	9502	0	1	0	1	0	1	0	1	0	1	0	1
ATC	6534	9502	0	1	0	1	0	1	0	1	0	1	0	1
ATC	6615	9502	0	2	0	2	0	2	0	2	0	2	0	2
ATC	8319	9502	0	2	0	2	0	2	0	2	0	2	0	2
ATC	9402	9502	0	2	0	2	0	2	0	2	0	2	0	2
AT1	6526	9502	0	1	0	1	0	1	0	1	0	1	0	1
AT1	6529	9502	0	2	0	2	0	2	0	2	0	2	0	2
AT1	6534	9502	0	2	0	2	0	2	0	2	0	2	0	2
AT1	6605	9502	0	2	0	2	0	2	0	2	0	2	0	2

II.A.3. TRAINING ACTIVITIES INSTRUCTOR AND SUPPORT BILLET REQUIREMENTS

DESIG	PNEC/SNEC		PFYs		CFY03		FY04		FY05		FY06		FY07	
RATING	PMOS/SMOS		OFF	ENL	OFF	ENL	OFF	ENL	OFF	ENL	OFF	ENL	OFF	ENL
AT1	6606	9502	0	1	0	1	0	1	0	1	0	1	0	1
AT1	6609	9502	0	2	0	2	0	2	0	2	0	2	0	2
AT1	6615	9502	0	1	0	1	0	1	0	1	0	1	0	1
AT1	6664	9502	0	2	0	2	0	2	0	2	0	2	0	2
AT1	6710	9502	0	2	0	2	0	2	0	2	0	2	0	2
AT1	6717	9502	0	2	0	2	0	2	0	2	0	2	0	2
AT1	6719	9502	0	2	0	2	0	2	0	2	0	2	0	2
AT1	6721	9502	0	5	0	5	0	5	0	5	0	5	0	5
AT1	8262	9502	0	2	0	2	0	2	0	2	0	2	0	2
AT1	8319	9502	0	4	0	4	0	4	0	4	0	4	0	4
AT2	6526	9502	0	1	0	1	0	1	0	1	0	1	0	1
AT2	6606	9502	0	1	0	1	0	1	0	1	0	1	0	1
AT2	6609	9502	0	1	0	1	0	1	0	1	0	1	0	1
AT2	6717	9502	0	1	0	1	0	1	0	1	0	1	0	1
AT2	6721	9502	0	2	0	2	0	2	0	2	0	2	0	2
AT2	8262	9502	0	2	0	2	0	2	0	2	0	2	0	2
TOTAL:			0	90	0	90	0	90	0	90	0	90	0	90

II.A.3. TRAINING ACTIVITIES INSTRUCTOR AND SUPPORT BILLET REQUIREMENTS

DESIG RATING	PNEC/SNEC PMOS/SMOS		PFYs OFF	PFYs ENL	CFY03 OFF	CFY03 ENL	FY04 OFF	FY04 ENL	FY05 OFF	FY05 ENL	FY06 OFF	FY06 ENL	FY07 OFF	FY07 ENL
TRAINING ACTIVITY, LOCATION, UIC: MTU 1012, NAMTRAU Whidbey Island, 66058														
INSTRUCTOR BILLETS														
USN														
ADC	8319	9502	0	1	0	1	0	1	0	1	0	1	0	1
AD1	6418	9502	0	3	0	3	0	3	0	3	0	3	0	3
AD1	8319	9502	0	1	0	1	0	1	0	1	0	1	0	1
AD2	6418	9502	0	1	0	1	0	1	0	1	0	1	0	1
AE1	7136	9502	0	1	0	1	0	1	0	1	0	1	0	1
AE1	7175	9502	0	1	0	1	0	1	0	1	0	1	0	1
AE1	8319	9502	0	3	0	3	0	3	0	3	0	3	0	3
AE2	8319	9502	0	1	0	1	0	1	0	1	0	1	0	1
AM1	8319	9502	0	1	0	1	0	1	0	1	0	1	0	1
AM2	8319	9502	0	1	0	1	0	1	0	1	0	1	0	1
AME1	8319	9502	0	1	0	1	0	1	0	1	0	1	0	1
AOC	8319	9502	0	1	0	1	0	1	0	1	0	1	0	1
AO1	8319	9502	0	3	0	3	0	3	0	3	0	3	0	3
AO2	8319	9502	0	1	0	1	0	1	0	1	0	1	0	1
ATC	6635		0	1	0	1	0	1	0	1	0	1	0	1
ATC	8319	9502	0	1	0	1	0	1	0	1	0	1	0	1
AT1	6526	9502	0	1	0	1	0	1	0	1	0	1	0	1
AT1	6529	9502	0	2	0	2	0	2	0	2	0	2	0	2
AT1	6610	9502	0	1	0	1	0	1	0	1	0	1	0	1
AT1	6615	9502	0	2	0	2	0	2	0	2	0	2	0	2
AT1	6664	9502	0	2	0	2	0	2	0	2	0	2	0	2
AT1	6717	9502	0	1	0	1	0	1	0	1	0	1	0	1
AT1	8319	9502	0	4	0	4	0	4	0	4	0	4	0	4
AT2	6526	9502	0	1	0	1	0	1	0	1	0	1	0	1
AT2	6610	9502	0	1	0	1	0	1	0	1	0	1	0	1
AT2	6635	9502	0	1	0	1	0	1	0	1	0	1	0	1
AT2	6717	9502	0	1	0	1	0	1	0	1	0	1	0	1
AT2	8262	9502	0	2	0	2	0	2	0	2	0	2	0	2
SUPPORT BILLETS														
USN														
AEC	8319		0	1	0	1	0	1	0	1	0	1	0	1
TOTAL:			0	42	0	42	0	42	0	42	0	42	0	42

II.A.3. TRAINING ACTIVITIES INSTRUCTOR AND SUPPORT BILLET REQUIREMENTS

DESIG RATING	PNEC/SNEC PMOS/SMOS	PFYs OFF	PFYs ENL	CFY03 OFF	CFY03 ENL	FY04 OFF	FY04 ENL	FY05 OFF	FY05 ENL	FY06 OFF	FY06 ENL	FY07 OFF	FY07 ENL
TRAINING ACTIVITY, LOCATION, UIC: Reserve ASW Training Center, NAS Willow Grove, PA, 44637													
INSTRUCTOR BILLETS													
USN													
	9402 9502	0	0	0	2	0	2	0	2	0	2	0	2
TOTAL:		0	0	0	2	0	2	0	2	0	2	0	2

II.A.4. CHARGEABLE STUDENT BILLET REQUIREMENTS

ACTIVITY, LOCATION, UIC	USN/ USMC	PFYs OFF	PFYs ENL	CFY03 OFF	CFY03 ENL	FY04 OFF	FY04 ENL	FY05 OFF	FY05 ENL	FY06 OFF	FY06 ENL	FY07 OFF	FY07 ENL
FASOTRAGRU DET, NAS Jacksonville, 43620													
	USN	0.0	1.0	0.0	1.0	0.0	1.0	0.0	1.0	0.0	1.0	0.0	1.0
	USN	0.0	1.0	0.0	1.0	0.0	1.0	0.0	1.0	0.0	1.0	0.0	1.0
Fleet Training Center Mayport, NS Mayport, 43015													
	USN	0.0	0.5	0.0	0.5	0.0	0.5	0.0	0.5	0.0	0.5	0.0	0.5
MTU 1007, NAMTRAU Oceana, 66045													
	USN	0.0	1.7	0.0	1.7	0.0	1.7	0.0	1.7	0.0	1.7	0.0	1.7
MTU 1011, NAMTRAU Jacksonville, 66051													
	USN	0.0	59.9	0.0	59.9	0.0	59.9	0.0	59.9	0.0	59.9	0.0	59.9
MTU 1039, NAMTRAU Oceana, 66045													
	USN	0.0	1.0	0.0	1.0	0.0	1.0	0.0	1.0	0.0	1.0	0.0	1.0
NAMTRA UNIT, NS Norfolk, 44680													
	USN	0.0	1.4	0.0	1.4	0.0	1.4	0.0	1.4	0.0	1.4	0.0	1.4
Reserve ASW Training Center, NAS Willow Grove, PA, 44637													
	USN	0.0	0.2	0.0	0.2	0.0	0.2	0.0	0.2	0.0	0.2	0.0	0.2
VP-30 Fleet Replacement Squadron, NAS Jacksonville, 65554													
	USN	134.4	183.8	134.4	183.8	134.4	183.8	134.4	183.8	134.4	183.8	134.4	183.8
FASOTRAGRUDET, NAS Whidbey Island, 0345A													
	USN	0.0	0.1	0.0	0.1	0.0	0.1	0.0	0.1	0.0	0.1	0.0	0.1
MTU 1012, NAMTRAU Whidbey Island, 66058													
	USN	0.0	40.0	0.0	40.0	0.0	40.0	0.0	40.0	0.0	40.0	0.0	40.0
MTU 1025, NAMTRAGRU DET MCAS Miramar, 66064													
	USN	0.0	0.5	0.0	0.5	0.0	0.5	0.0	0.5	0.0	0.5	0.0	0.5
MTU 1036, NAMTRAU North Island, 39476													
	USN	0.0	1.1	0.0	1.1	0.0	1.1	0.0	1.1	0.0	1.1	0.0	1.1
MTU 1038, NAMTRAU Lemoore, 39472													
	USN	0.0	2.6	0.0	2.6	0.0	2.6	0.0	2.6	0.0	2.6	0.0	2.6
SUMMARY TOTALS:													
	USN	134.4	294.8	134.4	294.8	134.4	294.8	134.4	294.8	134.4	294.8	134.4	294.8
GRAND TOTALS:													

II.A.4. CHARGEABLE STUDENT BILLET REQUIREMENTS

ACTIVITY, LOCATION, UIC	USN/ USMC	PFYs		CFY03		FY04		FY05		FY06		FY07	
		OFF	ENL	OFF	ENL	OFF	ENL	OFF	ENL	OFF	ENL	OFF	ENL
		134.4	294.8	134.4	294.8	134.4	294.8	134.4	294.8	134.4	294.8	134.4	294.8

II.A.5. ANNUAL INCREMENTAL AND CUMULATIVE BILLETS

DESIG/ RATING	PNEC/ PMOS	SNEC/ SMOS	BILLET BASE	CFY03 +/-	CFY03 CUM	FY04 +/-	FY04 CUM	FY05 +/-	FY05 CUM	FY06 +/-	FY06 CUM	FY07 +/-	FY07 CUM
a. OFFICER - USN													
Operational Billets ACDU and TAR													
1110			1	0	1	0	1	0	1	0	1	0	1
1120			2	0	2	0	2	0	2	0	2	0	2
1302			34	0	34	0	34	0	34	0	34	0	34
1311			613	0	613	0	613	0	613	0	613	0	613
1312			79	0	79	0	79	0	79	0	79	0	79
1321			415	0	415	0	415	0	415	0	415	0	415
1322			70	0	70	0	70	0	70	0	70	0	70
1512			2	0	2	0	2	0	2	0	2	0	2
1520			19	0	19	0	19	0	19	0	19	0	19
1630			14	0	14	0	14	0	14	0	14	0	14
2102			15	0	15	0	15	0	15	0	15	0	15
3100			1	0	1	0	1	0	1	0	1	0	1
6320			13	0	13	0	13	0	13	0	13	0	13
6330			13	0	13	0	13	0	13	0	13	0	13
6380			13	0	13	0	13	0	13	0	13	0	13
6410			2	0	2	0	2	0	2	0	2	0	2
7340			9	0	9	0	9	0	9	0	9	0	9
7360			12	0	12	0	12	0	12	0	12	0	12
7380			1	0	1	0	1	0	1	0	1	0	1
Fleet Support Billets ACDU and TAR													
1120			1	0	1	0	1	0	1	0	1	0	1
1300			5	0	5	0	5	0	5	0	5	0	5
1301			4	0	4	0	4	0	4	0	4	0	4
1302			70	0	70	0	70	0	70	0	70	0	70
1310			3	0	3	0	3	0	3	0	3	0	3
1311			36	0	36	0	36	0	36	0	36	0	36
1312			8	0	8	0	8	0	8	0	8	0	8
1320			1	0	1	0	1	0	1	0	1	0	1
1321			27	0	27	0	27	0	27	0	27	0	27
1322			12	0	12	0	12	0	12	0	12	0	12
1520			32	0	32	0	32	0	32	0	32	0	32
1630			16	0	16	0	16	0	16	0	16	0	16
1800			2	0	2	0	2	0	2	0	2	0	2
2102			2	0	2	0	2	0	2	0	2	0	2
2302			1	0	1	0	1	0	1	0	1	0	1
2500			1	0	1	0	1	0	1	0	1	0	1
6190			1	0	1	0	1	0	1	0	1	0	1
6320			1	0	1	0	1	0	1	0	1	0	1
6330			17	0	17	0	17	0	17	0	17	0	17
6360			2	0	2	0	2	0	2	0	2	0	2
6380			8	0	8	0	8	0	8	0	8	0	8
6410			1	0	1	0	1	0	1	0	1	0	1
6460			1	0	1	0	1	0	1	0	1	0	1
7340			11	0	11	0	11	0	11	0	11	0	11

II.A.5. ANNUAL INCREMENTAL AND CUMULATIVE BILLETS

DESIG/ RATING	PNEC/ PMOS	SNEC/ SMOS	BILLET BASE	CFY03 +/-	CFY03 CUM	FY04 +/-	FY04 CUM	FY05 +/-	FY05 CUM	FY06 +/-	FY06 CUM	FY07 +/-	FY07 CUM
7360			1	0	1	0	1	0	1	0	1	0	1
7380			7	0	7	0	7	0	7	0	7	0	7
Chargeable Student Billets ACDU and TAR													
			135	0	135	0	135	0	135	0	135	0	135
SELRES Billets													
1000			2	0	2	0	2	0	2	0	2	0	2
1301			8	0	8	0	8	0	8	0	8	0	8
1302			22	0	22	0	22	0	22	0	22	0	22
1310			2	0	2	0	2	0	2	0	2	0	2
1311			232	0	232	0	232	0	232	0	232	0	232
1320			5	0	5	0	5	0	5	0	5	0	5
1321			150	0	150	0	150	0	150	0	150	0	150
1520			3	0	3	0	3	0	3	0	3	0	3
1630			11	0	11	0	11	0	11	0	11	0	11
2100			1	0	1	0	1	0	1	0	1	0	1
2102			7	0	7	0	7	0	7	0	7	0	7
6321			3	0	3	0	3	0	3	0	3	0	3
6380			4	0	4	0	4	0	4	0	4	0	4
7340			1	0	1	0	1	0	1	0	1	0	1
TOTAL USN OFFICER BILLETS:													
Operational			1328	0	1328	0	1328	0	1328	0	1328	0	1328
Fleet Support			271	0	271	0	271	0	271	0	271	0	271
Chargeable Student			135	0	135	0	135	0	135	0	135	0	135
SELRES			451	0	451	0	451	0	451	0	451	0	451
b. ENLISTED - USN													
Operational Billets ACDU and TAR													
ADCS			2	0	2	0	2	0	2	0	2	0	2
ADC	8319		22	0	22	0	22	0	22	0	22	0	22
AD1	6415		2	0	2	0	2	0	2	0	2	0	2
AD1	8251	8319	4	0	4	0	4	0	4	0	4	0	4
AD1	8319		96	0	96	0	96	0	96	0	96	0	96
AD2	6418		18	0	18	0	18	0	18	0	18	0	18
AD2	8241		1	0	1	0	1	0	1	0	1	0	1
AD2	8319		95	0	95	0	95	0	95	0	95	0	95
AD3	6418		15	0	15	0	15	0	15	0	15	0	15

II.A.5. ANNUAL INCREMENTAL AND CUMULATIVE BILLETS

DESIG/	PNEC/	SNEC/	BILLET	CFY03		FY04		FY05		FY06		FY07	
RATING	PMOS	SMOS	BASE	+/-	CUM	+/-	CUM	+/-	CUM	+/-	CUM	+/-	CUM
AD3	8819		160	0	160	0	160	0	160	0	160	0	160
ADAN	6418		31	0	31	0	31	0	31	0	31	0	31
ADAN	8241		1	0	1	0	1	0	1	0	1	0	1
ADAN	8819		158	0	158	0	158	0	158	0	158	0	158
AECS	7182		1	0	1	0	1	0	1	0	1	0	1
AEC	8319		13	0	13	0	13	0	13	0	13	0	13
AE1	7182		1	0	1	0	1	0	1	0	1	0	1
AE1	8319		68	0	68	0	68	0	68	0	68	0	68
AE2	7136		19	0	19	0	19	0	19	0	19	0	19
AE2	7182		1	0	1	0	1	0	1	0	1	0	1
AE2	8251		2	0	2	0	2	0	2	0	2	0	2
AE2	8319		70	0	70	0	70	0	70	0	70	0	70
AE3	7137		19	0	19	0	19	0	19	0	19	0	19
AE3	7175		19	0	19	0	19	0	19	0	19	0	19
AE3	8319		3	0	3	0	3	0	3	0	3	0	3
AE3	8819		82	0	82	0	82	0	82	0	82	0	82
AEAN	8819		122	0	122	0	122	0	122	0	122	0	122
AK1			22	0	22	0	22	0	22	0	22	0	22
AK2			52	0	52	0	52	0	52	0	52	0	52
AK2		9590	5	0	5	0	5	0	5	0	5	0	5
AK3			48	0	48	0	48	0	48	0	48	0	48
AKAN			30	0	30	0	30	0	30	0	30	0	30
AMC			1	0	1	0	1	0	1	0	1	0	1
AMC	8319		24	0	24	0	24	0	24	0	24	0	24
AM1	8251		3	0	3	0	3	0	3	0	3	0	3
AM1	8319		106	0	106	0	106	0	106	0	106	0	106
AM1	8319	9595	7	0	7	0	7	0	7	0	7	0	7
AM2			12	0	12	0	12	0	12	0	12	0	12
AM2	7232		7	0	7	0	7	0	7	0	7	0	7
AM2	8241	8319	1	0	1	0	1	0	1	0	1	0	1
AM2	8251		6	0	6	0	6	0	6	0	6	0	6
AM2	8319		146	0	146	0	146	0	146	0	146	0	146
AM3	7213		19	0	19	0	19	0	19	0	19	0	19
AM3	8819		161	0	161	0	161	0	161	0	161	0	161
AMAN			29	0	29	0	29	0	29	0	29	0	29
AMAN	8819		242	0	242	0	242	0	242	0	242	0	242
AMEC	8319		1	0	1	0	1	0	1	0	1	0	1
AME1	8319		35	0	35	0	35	0	35	0	35	0	35
AME2	8319		40	0	40	0	40	0	40	0	40	0	40
AME3	8319		19	0	19	0	19	0	19	0	19	0	19
AMEAN	8319		50	0	50	0	50	0	50	0	50	0	50
AOC	8319		14	0	14	0	14	0	14	0	14	0	14
AO1	8271		8	0	8	0	8	0	8	0	8	0	8
AO1	8319	0812	50	0	50	0	50	0	50	0	50	0	50
AO2	8241		1	0	1	0	1	0	1	0	1	0	1
AO2	8271		7	0	7	0	7	0	7	0	7	0	7
AO2	8319		49	0	49	0	49	0	49	0	49	0	49
AO3			8	0	8	0	8	0	8	0	8	0	8

II.A.5. ANNUAL INCREMENTAL AND CUMULATIVE BILLETS

DESIG/	PNEC/	SNEC/	BILLET	CFY03		FY04		FY05		FY06		FY07	
RATING	PMOS	SMOS	BASE	+/-	CUM	+/-	CUM	+/-	CUM	+/-	CUM	+/-	CUM
AO3	6802		18	0	18	0	18	0	18	0	18	0	18
AO3	8271		7	0	7	0	7	0	7	0	7	0	7
AO3	8319		60	0	60	0	60	0	60	0	60	0	60
AOAN			65	0	65	0	65	0	65	0	65	0	65
AOAN	8319		30	0	30	0	30	0	30	0	30	0	30
APOCM	8300		14	0	14	0	14	0	14	0	14	0	14
APOCS			45	0	45	0	45	0	45	0	45	0	45
APOCS	8251		13	0	13	0	13	0	13	0	13	0	13
APOCS	8251	9502	1	0	1	0	1	0	1	0	1	0	1
APOCS	8800		52	0	52	0	52	0	52	0	52	0	52
APOC			20	0	20	0	20	0	20	0	20	0	20
APOC	8251		55	0	55	0	55	0	55	0	55	0	55
APOC	8251	9502	7	0	7	0	7	0	7	0	7	0	7
APOC	8284		1	0	1	0	1	0	1	0	1	0	1
APOC	8319		18	0	18	0	18	0	18	0	18	0	18
APOC	8319	8800	64	0	64	0	64	0	64	0	64	0	64
APO1			73	0	73	0	73	0	73	0	73	0	73
APO1		9590	13	0	13	0	13	0	13	0	13	0	13
APO1		9595	18	0	18	0	18	0	18	0	18	0	18
APO1	8251		153	0	153	0	153	0	153	0	153	0	153
APO1	8251	9502	28	0	28	0	28	0	28	0	28	0	28
APO1	8289		2	0	2	0	2	0	2	0	2	0	2
APO1	8319		26	0	26	0	26	0	26	0	26	0	26
APO2			33	0	33	0	33	0	33	0	33	0	33
APO2		9590	1	0	1	0	1	0	1	0	1	0	1
APO2	8241		3	0	3	0	3	0	3	0	3	0	3
APO2	8251		212	0	212	0	212	0	212	0	212	0	212
APO2	8251	9502	30	0	30	0	30	0	30	0	30	0	30
APO2	8289		3	0	3	0	3	0	3	0	3	0	3
APO3			8	0	8	0	8	0	8	0	8	0	8
APO3	8251		36	0	36	0	36	0	36	0	36	0	36
APO3	8819		3	0	3	0	3	0	3	0	3	0	3
ATCS			1	0	1	0	1	0	1	0	1	0	1
ATCS	6582		1	0	1	0	1	0	1	0	1	0	1
ATCS	8265		1	0	1	0	1	0	1	0	1	0	1
ATC	8262		7	0	7	0	7	0	7	0	7	0	7
ATC	8265		2	0	2	0	2	0	2	0	2	0	2
ATC	8319		20	0	20	0	20	0	20	0	20	0	20
ATC	9402		13	0	13	0	13	0	13	0	13	0	13
ATC	9402	9502	5	0	5	0	5	0	5	0	5	0	5
AT1			3	0	3	0	3	0	3	0	3	0	3
AT1	6582	6701	1	0	1	0	1	0	1	0	1	0	1
AT1	6719		12	0	12	0	12	0	12	0	12	0	12
AT1	8262		7	0	7	0	7	0	7	0	7	0	7
AT1	8265		4	0	4	0	4	0	4	0	4	0	4
AT1	8319		59	0	59	0	59	0	59	0	59	0	59
AT1	8319	6701	12	0	12	0	12	0	12	0	12	0	12
AT1	9402		41	2	43	0	43	0	43	0	43	0	43

II.A.5. ANNUAL INCREMENTAL AND CUMULATIVE BILLETS

DESIG/	PNEC/	SNEC/	BILLET	CFY03		FY04		FY05		FY06		FY07	
RATING	PMOS	SMOS	BASE	+/-	CUM	+/-	CUM	+/-	CUM	+/-	CUM	+/-	CUM
AT1	9402	9502	14	0	14	0	14	0	14	0	14	0	14
AT2	6582		1	0	1	0	1	0	1	0	1	0	1
AT2	6605	6606	3	0	3	0	3	0	3	0	3	0	3
AT2	6612		15	0	15	0	15	0	15	0	15	0	15
AT2	6614		3	0	3	0	3	0	3	0	3	0	3
AT2	6664	9526	16	0	16	0	16	0	16	0	16	0	16
AT2	6717		12	0	12	0	12	0	12	0	12	0	12
AT2	6719		18	0	18	0	18	0	18	0	18	0	18
AT2	6721		12	0	12	0	12	0	12	0	12	0	12
AT2	8262		21	0	21	0	21	0	21	0	21	0	21
AT2	8265		1	0	1	0	1	0	1	0	1	0	1
AT2	8319		78	0	78	0	78	0	78	0	78	0	78
AT2	9402		63	0	63	0	63	0	63	0	63	0	63
AT2	9402	9502	25	0	25	0	25	0	25	0	25	0	25
AT3			4	0	4	0	4	0	4	0	4	0	4
AT3		9527	15	0	15	0	15	0	15	0	15	0	15
AT3	6526		19	0	19	0	19	0	19	0	19	0	19
AT3	6529		12	0	12	0	12	0	12	0	12	0	12
AT3	6534	9527	3	0	3	0	3	0	3	0	3	0	3
AT3	6611	6609	3	0	3	0	3	0	3	0	3	0	3
AT3	6612		12	0	12	0	12	0	12	0	12	0	12
AT3	6634	6529	3	0	3	0	3	0	3	0	3	0	3
AT3	6664		31	0	31	0	31	0	31	0	31	0	31
AT3	6716		12	0	12	0	12	0	12	0	12	0	12
AT3	8262		10	0	10	0	10	0	10	0	10	0	10
AT3	8819		135	0	135	0	135	0	135	0	135	0	135
AT3	9402		75	0	75	0	75	0	75	0	75	0	75
ATAN			3	0	3	0	3	0	3	0	3	0	3
ATAN	6605	6710	12	0	12	0	12	0	12	0	12	0	12
ATAN	6609	6717	12	0	12	0	12	0	12	0	12	0	12
ATAN	6611	6609	3	0	3	0	3	0	3	0	3	0	3
ATAN	6612		3	0	3	0	3	0	3	0	3	0	3
ATAN	6613		3	0	3	0	3	0	3	0	3	0	3
ATAN	6717		12	0	12	0	12	0	12	0	12	0	12
ATAN	8819		144	0	144	0	144	0	144	0	144	0	144
AWCM	7841	9502	1	0	1	0	1	0	1	0	1	0	1
AWCS	7841		13	0	13	0	13	0	13	0	13	0	13
AWCS	7841	9502	1	0	1	0	1	0	1	0	1	0	1
AWCS	7861	9502	1	0	1	0	1	0	1	0	1	0	1
AWC	7821		4	0	4	0	4	0	4	0	4	0	4
AWC	7841		14	0	14	0	14	0	14	0	14	0	14
AWC	7841	9502	7	0	7	0	7	0	7	0	7	0	7
AWC	7861		15	0	15	0	15	0	15	0	15	0	15
AWC	7861	9502	4	0	4	0	4	0	4	0	4	0	4
AWC	7877	9502	5	0	5	0	5	0	5	0	5	0	5
AW1	7821		8	0	8	0	8	0	8	0	8	0	8
AW1	7841		69	0	69	0	69	0	69	0	69	0	69
AW1	7841	9502	16	0	16	0	16	0	16	0	16	0	16

II.A.5. ANNUAL INCREMENTAL AND CUMULATIVE BILLETS

DESIG/ RATING	PNEC/ PMOS	SNEC/ SMOS	BILLET BASE	CFY03 +/-	CFY03 CUM	FY04 +/-	FY04 CUM	FY05 +/-	FY05 CUM	FY06 +/-	FY06 CUM	FY07 +/-	FY07 CUM
AW1	7861		21	0	21	0	21	0	21	0	21	0	21
AW1	7861	9502	16	0	16	0	16	0	16	0	16	0	16
AW2	7821		8	0	8	0	8	0	8	0	8	0	8
AW2	7841		149	0	149	0	149	0	149	0	149	0	149
AW2	7841	9502	23	0	23	0	23	0	23	0	23	0	23
AW2	7861		75	0	75	0	75	0	75	0	75	0	75
AW2	7861	9502	15	0	15	0	15	0	15	0	15	0	15
AW3	7821		4	0	4	0	4	0	4	0	4	0	4
AW3	7841		116	0	116	0	116	0	116	0	116	0	116
AW3	7861		60	0	60	0	60	0	60	0	60	0	60
AWAN	7841		66	0	66	0	66	0	66	0	66	0	66
AWAN	7861		52	0	52	0	52	0	52	0	52	0	52
AZC			2	0	2	0	2	0	2	0	2	0	2
AZ1			20	0	20	0	20	0	20	0	20	0	20
AZ1	6315		14	0	14	0	14	0	14	0	14	0	14
AZ2			84	0	84	0	84	0	84	0	84	0	84
AZ2	6303		8	0	8	0	8	0	8	0	8	0	8
AZ3			16	0	16	0	16	0	16	0	16	0	16
AZAN			48	0	48	0	48	0	48	0	48	0	48
CTA1	9190		1	0	1	0	1	0	1	0	1	0	1
DK2			3	0	3	0	3	0	3	0	3	0	3
DK2	2905		15	0	15	0	15	0	15	0	15	0	15
DK3			12	0	12	0	12	0	12	0	12	0	12
DM2			2	0	2	0	2	0	2	0	2	0	2
HM2	8406		21	0	21	0	21	0	21	0	21	0	21
HM3	8406		14	0	14	0	14	0	14	0	14	0	14
IS1			1	0	1	0	1	0	1	0	1	0	1
IS1	3924		12	0	12	0	12	0	12	0	12	0	12
IS2			13	0	13	0	13	0	13	0	13	0	13
IS3			12	0	12	0	12	0	12	0	12	0	12
ITC	2735		1	0	1	0	1	0	1	0	1	0	1
ITC	2781		1	0	1	0	1	0	1	0	1	0	1
IT1			1	0	1	0	1	0	1	0	1	0	1
IT1	2781		13	0	13	0	13	0	13	0	13	0	13
IT2			1	0	1	0	1	0	1	0	1	0	1
IT2	2735		1	0	1	0	1	0	1	0	1	0	1
IT2	2780		2	0	2	0	2	0	2	0	2	0	2
IT3			2	0	2	0	2	0	2	0	2	0	2
IT3	2735		26	0	26	0	26	0	26	0	26	0	26
MS2			24	0	24	0	24	0	24	0	24	0	24
MS3			43	0	43	0	43	0	43	0	43	0	43
MSSN			61	0	61	0	61	0	61	0	61	0	61
NCC			1	0	1	0	1	0	1	0	1	0	1
NC1			21	0	21	0	21	0	21	0	21	0	21
PH2	8133		12	0	12	0	12	0	12	0	12	0	12
PH2	8288		12	0	12	0	12	0	12	0	12	0	12
PH3	8133		12	0	12	0	12	0	12	0	12	0	12
PN1			12	0	12	0	12	0	12	0	12	0	12

II.A.5. ANNUAL INCREMENTAL AND CUMULATIVE BILLETS

DESIG/ RATING	PNEC/ PMOS	SNEC/ SMOS	BILLET BASE	CFY03 +/-	CFY03 CUM	FY04 +/-	FY04 CUM	FY05 +/-	FY05 CUM	FY06 +/-	FY06 CUM	FY07 +/-	FY07 CUM
PN2			28	0	28	0	28	0	28	0	28	0	28
PN3			16	0	16	0	16	0	16	0	16	0	16
PNSN			24	0	24	0	24	0	24	0	24	0	24
POCM		9580	21	0	21	0	21	0	21	0	21	0	21
POC			1	0	1	0	1	0	1	0	1	0	1
PO1		9571	15	0	15	0	15	0	15	0	15	0	15
PO2			4	0	4	0	4	0	4	0	4	0	4
PO2	6718		55	0	55	0	55	0	55	0	55	0	55
PO3			13	0	13	0	13	0	13	0	13	0	13
PRC			1	0	1	0	1	0	1	0	1	0	1
PR1			22	0	22	0	22	0	22	0	22	0	22
PR2			40	0	40	0	40	0	40	0	40	0	40
PR3			44	0	44	0	44	0	44	0	44	0	44
PRAN			49	0	49	0	49	0	49	0	49	0	49
SKC			14	0	14	0	14	0	14	0	14	0	14
YNCS			1	0	1	0	1	0	1	0	1	0	1
YNC			20	0	20	0	20	0	20	0	20	0	20
YN1			4	0	4	0	4	0	4	0	4	0	4
YN2			46	0	46	0	46	0	46	0	46	0	46
YN3			36	0	36	0	36	0	36	0	36	0	36
YNSN			59	0	59	0	59	0	59	0	59	0	59
AN			383	0	383	0	383	0	383	0	383	0	383
SN			3	0	3	0	3	0	3	0	3	0	3
	8251		1	0	1	0	1	0	1	0	1	0	1
Fleet Support Billets ACDU and TAR													
ADCS			7	0	7	0	7	0	7	0	7	0	7
ADCS	8251		2	0	2	0	2	0	2	0	2	0	2
ADC			16	0	16	0	16	0	16	0	16	0	16
ADC	6416		2	0	2	0	2	0	2	0	2	0	2
ADC	6418		5	0	5	0	5	0	5	0	5	0	5
ADC	6421		1	0	1	0	1	0	1	0	1	0	1
ADC	6422		3	0	3	0	3	0	3	0	3	0	3
ADC	8251		1	0	1	0	1	0	1	0	1	0	1
ADC	8251	8319	2	0	2	0	2	0	2	0	2	0	2
ADC	8251	9502	1	0	1	0	1	0	1	0	1	0	1
ADC	8319		5	0	5	0	5	0	5	0	5	0	5
ADC	8319	9502	2	0	2	0	2	0	2	0	2	0	2
AD1			2	0	2	0	2	0	2	0	2	0	2
AD1	6403		1	0	1	0	1	0	1	0	1	0	1
AD1	6403	6418	1	0	1	0	1	0	1	0	1	0	1
AD1	6415		5	0	5	0	5	0	5	0	5	0	5
AD1	6418		16	0	16	0	16	0	16	0	16	0	16
AD1	6419	6426	33	0	33	0	33	0	33	0	33	0	33
AD1	6420		3	0	3	0	3	0	3	0	3	0	3
AD1	6421		5	0	5	0	5	0	5	0	5	0	5
AD1	6422		11	0	11	0	11	0	11	0	11	0	11
AD1	6423		4	0	4	0	4	0	4	0	4	0	4

II.A.5. ANNUAL INCREMENTAL AND CUMULATIVE BILLETS

DESIG/	PNEC/	SNEC/	BILLET	CFY03		FY04		FY05		FY06		FY07	
RATING	PMOS	SMOS	BASE	+/-	CUM	+/-	CUM	+/-	CUM	+/-	CUM	+/-	CUM
AD1	6426		3	0	3	0	3	0	3	0	3	0	3
AD1	6426	6419	2	0	2	0	2	0	2	0	2	0	2
AD1	6518	6403	1	0	1	0	1	0	1	0	1	0	1
AD1	8241		1	0	1	0	1	0	1	0	1	0	1
AD1	8312		2	0	2	0	2	0	2	0	2	0	2
AD1	8319		10	0	10	0	10	0	10	0	10	0	10
AD1	8319	9502	1	0	1	0	1	0	1	0	1	0	1
AD2			14	0	14	0	14	0	14	0	14	0	14
AD2	6403		6	0	6	0	6	0	6	0	6	0	6
AD2	6415		2	0	2	0	2	0	2	0	2	0	2
AD2	6416		1	0	1	0	1	0	1	0	1	0	1
AD2	6418		72	0	72	0	72	0	72	0	72	0	72
AD2	6419		8	0	8	0	8	0	8	0	8	0	8
AD2	6419	6426	1	0	1	0	1	0	1	0	1	0	1
AD2	6420		3	0	3	0	3	0	3	0	3	0	3
AD2	6421		6	0	6	0	6	0	6	0	6	0	6
AD2	6422		17	0	17	0	17	0	17	0	17	0	17
AD2	6423		8	0	8	0	8	0	8	0	8	0	8
AD2	6426		5	0	5	0	5	0	5	0	5	0	5
AD2	6428		1	0	1	0	1	0	1	0	1	0	1
AD2	8241		2	0	2	0	2	0	2	0	2	0	2
AD2	8251	8319	2	0	2	0	2	0	2	0	2	0	2
AD2	8312		2	0	2	0	2	0	2	0	2	0	2
AD2	8319		9	0	9	0	9	0	9	0	9	0	9
AD3			19	0	19	0	19	0	19	0	19	0	19
AD3	6415		2	0	2	0	2	0	2	0	2	0	2
AD3	6416		2	0	2	0	2	0	2	0	2	0	2
AD3	6418		69	0	69	0	69	0	69	0	69	0	69
AD3	6419		2	0	2	0	2	0	2	0	2	0	2
AD3	6420		4	0	4	0	4	0	4	0	4	0	4
AD3	6421		10	0	10	0	10	0	10	0	10	0	10
AD3	6422		8	0	8	0	8	0	8	0	8	0	8
AD3	6423		3	0	3	0	3	0	3	0	3	0	3
AD3	6426		7	0	7	0	7	0	7	0	7	0	7
AD3	6426	6419	1	0	1	0	1	0	1	0	1	0	1
AD3	6428		1	0	1	0	1	0	1	0	1	0	1
AD3	8241	8819	1	0	1	0	1	0	1	0	1	0	1
AD3	8312		2	0	2	0	2	0	2	0	2	0	2
AD3	8819		10	0	10	0	10	0	10	0	10	0	10
ADAN			2	0	2	0	2	0	2	0	2	0	2
ADAN	6418		18	0	18	0	18	0	18	0	18	0	18
ADAN	6423		3	0	3	0	3	0	3	0	3	0	3
ADAN	8819		10	0	10	0	10	0	10	0	10	0	10
AECS			3	0	3	0	3	0	3	0	3	0	3
AEC			12	0	12	0	12	0	12	0	12	0	12
AEC	7133		1	0	1	0	1	0	1	0	1	0	1
AEC	8251		1	0	1	0	1	0	1	0	1	0	1
AEC	8251	7182	1	0	1	0	1	0	1	0	1	0	1

II.A.5. ANNUAL INCREMENTAL AND CUMULATIVE BILLETS

DESIG/ RATING	PNEC/ PMOS	SNEC/ SMOS	BILLET BASE	CFY03 +/-	CFY03 CUM	FY04 +/-	FY04 CUM	FY05 +/-	FY05 CUM	FY06 +/-	FY06 CUM	FY07 +/-	FY07 CUM
AEC	8319		3	0	3	0	3	0	3	0	3	0	3
AE1			2	0	2	0	2	0	2	0	2	0	2
AE1		9588	1	0	1	0	1	0	1	0	1	0	1
AE1	6701		2	0	2	0	2	0	2	0	2	0	2
AE1	7131		3	0	3	0	3	0	3	0	3	0	3
AE1	7136		1	0	1	0	1	0	1	0	1	0	1
AE1	7137		6	0	6	0	6	0	6	0	6	0	6
AE1	7144		2	0	2	0	2	0	2	0	2	0	2
AE1	7175		6	0	6	0	6	0	6	0	6	0	6
AE1	7175	7131	1	0	1	0	1	0	1	0	1	0	1
AE1	7175	7136	1	0	1	0	1	0	1	0	1	0	1
AE1	7175	9526	1	0	1	0	1	0	1	0	1	0	1
AE1	7197		1	0	1	0	1	0	1	0	1	0	1
AE1	8241	7182	1	0	1	0	1	0	1	0	1	0	1
AE1	8251		2	0	2	0	2	0	2	0	2	0	2
AE1	8251	7182	1	0	1	0	1	0	1	0	1	0	1
AE1	8251	9502	1	0	1	0	1	0	1	0	1	0	1
AE1	8319		5	0	5	0	5	0	5	0	5	0	5
AE1	8319	9502	1	0	1	0	1	0	1	0	1	0	1
AE2			11	0	11	0	11	0	11	0	11	0	11
AE2		9526	3	0	3	0	3	0	3	0	3	0	3
AE2		9527	1	0	1	0	1	0	1	0	1	0	1
AE2	7105		3	0	3	0	3	0	3	0	3	0	3
AE2	7105	7133	1	0	1	0	1	0	1	0	1	0	1
AE2	7131		9	0	9	0	9	0	9	0	9	0	9
AE2	7136		5	0	5	0	5	0	5	0	5	0	5
AE2	7137		10	0	10	0	10	0	10	0	10	0	10
AE2	7137	9526	4	0	4	0	4	0	4	0	4	0	4
AE2	7137	9527	2	0	2	0	2	0	2	0	2	0	2
AE2	7144		2	0	2	0	2	0	2	0	2	0	2
AE2	7144	9527	1	0	1	0	1	0	1	0	1	0	1
AE2	7173		1	0	1	0	1	0	1	0	1	0	1
AE2	7175		8	0	8	0	8	0	8	0	8	0	8
AE2	7175	9526	1	0	1	0	1	0	1	0	1	0	1
AE2	7197		4	0	4	0	4	0	4	0	4	0	4
AE2	7197	9527	1	0	1	0	1	0	1	0	1	0	1
AE2	7232	9595	1	0	1	0	1	0	1	0	1	0	1
AE2	8241	7182	1	0	1	0	1	0	1	0	1	0	1
AE2	8251	7182	2	0	2	0	2	0	2	0	2	0	2
AE2	8312		3	0	3	0	3	0	3	0	3	0	3
AE2	8319		5	0	5	0	5	0	5	0	5	0	5
AE3			14	0	14	0	14	0	14	0	14	0	14
AE3		9527	1	0	1	0	1	0	1	0	1	0	1
AE3	7105		3	0	3	0	3	0	3	0	3	0	3
AE3	7105	7133	5	0	5	0	5	0	5	0	5	0	5
AE3	7131		11	0	11	0	11	0	11	0	11	0	11
AE3	7136		6	0	6	0	6	0	6	0	6	0	6
AE3	7137		14	0	14	0	14	0	14	0	14	0	14

II.A.5. ANNUAL INCREMENTAL AND CUMULATIVE BILLETS

DESIG/	PNEC/	SNEC/	BILLET	CFY03		FY04		FY05		FY06		FY07	
RATING	PMOS	SMOS	BASE	+/-	CUM	+/-	CUM	+/-	CUM	+/-	CUM	+/-	CUM
AE3	7137	9527	2	0	2	0	2	0	2	0	2	0	2
AE3	7144		8	0	8	0	8	0	8	0	8	0	8
AE3	7173		1	0	1	0	1	0	1	0	1	0	1
AE3	7175		5	0	5	0	5	0	5	0	5	0	5
AE3	7197		7	0	7	0	7	0	7	0	7	0	7
AE3	8312		1	0	1	0	1	0	1	0	1	0	1
AE3	8319		6	0	6	0	6	0	6	0	6	0	6
AEAN			6	0	6	0	6	0	6	0	6	0	6
AEAN	7131		7	0	7	0	7	0	7	0	7	0	7
AEAN	7137		1	0	1	0	1	0	1	0	1	0	1
AEAN	7144		1	0	1	0	1	0	1	0	1	0	1
AEAN	7182		1	0	1	0	1	0	1	0	1	0	1
AEAN	8819		7	0	7	0	7	0	7	0	7	0	7
AFCM			2	0	2	0	2	0	2	0	2	0	2
AFCM	8300		3	0	3	0	3	0	3	0	3	0	3
AK1			8	0	8	0	8	0	8	0	8	0	8
AK1		9590	2	0	2	0	2	0	2	0	2	0	2
AK1	8012		10	0	10	0	10	0	10	0	10	0	10
AK2			36	0	36	0	36	0	36	0	36	0	36
AK2		9590	6	0	6	0	6	0	6	0	6	0	6
AK2		9595	6	0	6	0	6	0	6	0	6	0	6
AK2	8012		3	0	3	0	3	0	3	0	3	0	3
AK2	8012	8013	1	0	1	0	1	0	1	0	1	0	1
AK2	8012	9590	1	0	1	0	1	0	1	0	1	0	1
AK2	8012	9595	1	0	1	0	1	0	1	0	1	0	1
AK3			29	0	29	0	29	0	29	0	29	0	29
AKAN			3	0	3	0	3	0	3	0	3	0	3
AMCS			7	0	7	0	7	0	7	0	7	0	7
AMC			8	0	8	0	8	0	8	0	8	0	8
AMC	7212		3	0	3	0	3	0	3	0	3	0	3
AMC	7225		1	0	1	0	1	0	1	0	1	0	1
AMC	7232		3	0	3	0	3	0	3	0	3	0	3
AMC	8319		8	0	8	0	8	0	8	0	8	0	8
AMC	8319	9502	1	0	1	0	1	0	1	0	1	0	1
AM1			7	0	7	0	7	0	7	0	7	0	7
AM1		9595	5	0	5	0	5	0	5	0	5	0	5
AM1	7212		8	0	8	0	8	0	8	0	8	0	8
AM1	7212	9571	1	0	1	0	1	0	1	0	1	0	1
AM1	7213		1	0	1	0	1	0	1	0	1	0	1
AM1	7222		3	0	3	0	3	0	3	0	3	0	3
AM1	7222	7232	1	0	1	0	1	0	1	0	1	0	1
AM1	7225		12	0	12	0	12	0	12	0	12	0	12
AM1	7225	9571	1	0	1	0	1	0	1	0	1	0	1
AM1	7226		5	0	5	0	5	0	5	0	5	0	5
AM1	7227		1	0	1	0	1	0	1	0	1	0	1
AM1	7232		12	0	12	0	12	0	12	0	12	0	12
AM1	8251	8319	2	0	2	0	2	0	2	0	2	0	2
AM1	8310	9502	1	0	1	0	1	0	1	0	1	0	1

II.A.5. ANNUAL INCREMENTAL AND CUMULATIVE BILLETS

DESIG/ RATING	PNEC/ PMOS	SNEC/ SMOS	BILLET BASE	CFY03 +/-	CFY03 CUM	FY04 +/-	FY04 CUM	FY05 +/-	FY05 CUM	FY06 +/-	FY06 CUM	FY07 +/-	FY07 CUM
AM1	8319		13	0	13	0	13	0	13	0	13	0	13
AM2			12	0	12	0	12	0	12	0	12	0	12
AM2		9595	4	0	4	0	4	0	4	0	4	0	4
AM2	7212		8	0	8	0	8	0	8	0	8	0	8
AM2	7213		4	0	4	0	4	0	4	0	4	0	4
AM2	7222		16	0	16	0	16	0	16	0	16	0	16
AM2	7222	7232	2	0	2	0	2	0	2	0	2	0	2
AM2	7225		13	0	13	0	13	0	13	0	13	0	13
AM2	7225	7232	1	0	1	0	1	0	1	0	1	0	1
AM2	7226		6	0	6	0	6	0	6	0	6	0	6
AM2	7227		1	0	1	0	1	0	1	0	1	0	1
AM2	7232		20	0	20	0	20	0	20	0	20	0	20
AM2	7232	7222	2	0	2	0	2	0	2	0	2	0	2
AM2	8241		1	0	1	0	1	0	1	0	1	0	1
AM2	8251	8319	1	0	1	0	1	0	1	0	1	0	1
AM2	8312		1	0	1	0	1	0	1	0	1	0	1
AM2	8319		12	0	12	0	12	0	12	0	12	0	12
AM3			19	0	19	0	19	0	19	0	19	0	19
AM3	7212		2	0	2	0	2	0	2	0	2	0	2
AM3	7213		6	0	6	0	6	0	6	0	6	0	6
AM3	7222		12	0	12	0	12	0	12	0	12	0	12
AM3	7225		5	0	5	0	5	0	5	0	5	0	5
AM3	7225	7232	1	0	1	0	1	0	1	0	1	0	1
AM3	7226		4	0	4	0	4	0	4	0	4	0	4
AM3	7227		1	0	1	0	1	0	1	0	1	0	1
AM3	7232		31	0	31	0	31	0	31	0	31	0	31
AM3	8312		1	0	1	0	1	0	1	0	1	0	1
AM3	8819		12	0	12	0	12	0	12	0	12	0	12
AMAN			6	0	6	0	6	0	6	0	6	0	6
AMAN	7212		2	0	2	0	2	0	2	0	2	0	2
AMAN	7226		1	0	1	0	1	0	1	0	1	0	1
AMAN	7232		3	0	3	0	3	0	3	0	3	0	3
AMAN	8819		9	0	9	0	9	0	9	0	9	0	9
AMEC			1	0	1	0	1	0	1	0	1	0	1
AMEC	8319		3	0	3	0	3	0	3	0	3	0	3
AME1			1	0	1	0	1	0	1	0	1	0	1
AME1		9571	1	0	1	0	1	0	1	0	1	0	1
AME1	8319		3	0	3	0	3	0	3	0	3	0	3
AME1	8332		1	0	1	0	1	0	1	0	1	0	1
AME2			4	0	4	0	4	0	4	0	4	0	4
AME2	8319		5	0	5	0	5	0	5	0	5	0	5
AME3	8319		7	0	7	0	7	0	7	0	7	0	7
AMEAN	8319		2	0	2	0	2	0	2	0	2	0	2
AOCS	8271		2	0	2	0	2	0	2	0	2	0	2
AOC			3	0	3	0	3	0	3	0	3	0	3
AOC	6802		1	0	1	0	1	0	1	0	1	0	1
AOC	8319		6	0	6	0	6	0	6	0	6	0	6
AOC	8319	9502	1	0	1	0	1	0	1	0	1	0	1

II.A.5. ANNUAL INCREMENTAL AND CUMULATIVE BILLETS

DESIG/	PNEC/	SNEC/	BILLET	CFY03		FY04		FY05		FY06		FY07	
RATING	PMOS	SMOS	BASE	+/-	CUM	+/-	CUM	+/-	CUM	+/-	CUM	+/-	CUM
AO1			5	0	5	0	5	0	5	0	5	0	5
AO1	6802		14	0	14	0	14	0	14	0	14	0	14
AO1	6802	0812	1	0	1	0	1	0	1	0	1	0	1
AO1	6810		1	0	1	0	1	0	1	0	1	0	1
AO1	8319	0812	5	0	5	0	5	0	5	0	5	0	5
AO1	8319	9502	2	0	2	0	2	0	2	0	2	0	2
AO2			6	0	6	0	6	0	6	0	6	0	6
AO2	0812		1	0	1	0	1	0	1	0	1	0	1
AO2	6802		15	0	15	0	15	0	15	0	15	0	15
AO2	6810		1	0	1	0	1	0	1	0	1	0	1
AO2	8319		1	0	1	0	1	0	1	0	1	0	1
AO2	8319	9502	3	0	3	0	3	0	3	0	3	0	3
AO3			3	0	3	0	3	0	3	0	3	0	3
AO3	6802		18	0	18	0	18	0	18	0	18	0	18
AOAN			1	0	1	0	1	0	1	0	1	0	1
AOAN	6802		1	0	1	0	1	0	1	0	1	0	1
APOCM			5	0	5	0	5	0	5	0	5	0	5
APOCM		9580	3	0	3	0	3	0	3	0	3	0	3
APOCM	8300		10	0	10	0	10	0	10	0	10	0	10
APOCS			13	0	13	0	13	0	13	0	13	0	13
APOCS	8800		4	0	4	0	4	0	4	0	4	0	4
APOC			6	0	6	0	6	0	6	0	6	0	6
APOC	8251		5	0	5	0	5	0	5	0	5	0	5
APOC	8284		2	0	2	0	2	0	2	0	2	0	2
APOC	8319		1	0	1	0	1	0	1	0	1	0	1
APOC	8319	8800	4	0	4	0	4	0	4	0	4	0	4
APO1			10	0	10	0	10	0	10	0	10	0	10
APO1		9526	4	0	4	0	4	0	4	0	4	0	4
APO1		9527	1	0	1	0	1	0	1	0	1	0	1
APO1		9588	1	0	1	0	1	0	1	0	1	0	1
APO1		9590	1	0	1	0	1	0	1	0	1	0	1
APO1		9595	2	0	2	0	2	0	2	0	2	0	2
APO1	8251		4	0	4	0	4	0	4	0	4	0	4
APO1	8251	9502	2	0	2	0	2	0	2	0	2	0	2
APO1	8284		3	0	3	0	3	0	3	0	3	0	3
APO1	8319		2	0	2	0	2	0	2	0	2	0	2
APO2			9	0	9	0	9	0	9	0	9	0	9
APO2		9526	5	0	5	0	5	0	5	0	5	0	5
APO2	6673	9526	1	0	1	0	1	0	1	0	1	0	1
APO2	6673	9527	1	0	1	0	1	0	1	0	1	0	1
APO2	8201		2	0	2	0	2	0	2	0	2	0	2
APO2	8251		11	0	11	0	11	0	11	0	11	0	11
APO2	8284		7	0	7	0	7	0	7	0	7	0	7
APO3			3	0	3	0	3	0	3	0	3	0	3
APO3	6673	9526	1	0	1	0	1	0	1	0	1	0	1
APO3	8284		2	0	2	0	2	0	2	0	2	0	2
ASCS	7609		7	0	7	0	7	0	7	0	7	0	7
ASC			3	0	3	0	3	0	3	0	3	0	3

II.A.5. ANNUAL INCREMENTAL AND CUMULATIVE BILLETS

DESIG/	PNEC/	SNEC/	BILLET	CFY03		FY04		FY05		FY06		FY07	
RATING	PMOS	SMOS	BASE	+/-	CUM	+/-	CUM	+/-	CUM	+/-	CUM	+/-	CUM
ASC	7609		14	0	14	0	14	0	14	0	14	0	14
AS1			3	0	3	0	3	0	3	0	3	0	3
AS1		9502	10	0	10	0	10	0	10	0	10	0	10
AS1		9590	3	0	3	0	3	0	3	0	3	0	3
AS1	7601		5	0	5	0	5	0	5	0	5	0	5
AS1	7606		4	0	4	0	4	0	4	0	4	0	4
AS1	7606	7222	1	0	1	0	1	0	1	0	1	0	1
AS1	7606	7616	1	0	1	0	1	0	1	0	1	0	1
AS1	7607		1	0	1	0	1	0	1	0	1	0	1
AS1	7609		22	0	22	0	22	0	22	0	22	0	22
AS1	7609	7607	1	0	1	0	1	0	1	0	1	0	1
AS1	7609	7612	10	0	10	0	10	0	10	0	10	0	10
AS1	7609	7614	1	0	1	0	1	0	1	0	1	0	1
AS1	7612		2	0	2	0	2	0	2	0	2	0	2
AS1	7612	7222	1	0	1	0	1	0	1	0	1	0	1
AS1	7614		6	0	6	0	6	0	6	0	6	0	6
AS2			7	0	7	0	7	0	7	0	7	0	7
AS2		9502	5	0	5	0	5	0	5	0	5	0	5
AS2		9503	1	0	1	0	1	0	1	0	1	0	1
AS2		9590	2	0	2	0	2	0	2	0	2	0	2
AS2		9595	4	0	4	0	4	0	4	0	4	0	4
AS2	7222		4	0	4	0	4	0	4	0	4	0	4
AS2	7601		7	0	7	0	7	0	7	0	7	0	7
AS2	7603		8	0	8	0	8	0	8	0	8	0	8
AS2	7606		12	0	12	0	12	0	12	0	12	0	12
AS2	7606	7222	1	0	1	0	1	0	1	0	1	0	1
AS2	7606	7607	3	0	3	0	3	0	3	0	3	0	3
AS2	7606	7614	1	0	1	0	1	0	1	0	1	0	1
AS2	7607		13	0	13	0	13	0	13	0	13	0	13
AS2	7607	7612	1	0	1	0	1	0	1	0	1	0	1
AS2	7607	7614	1	0	1	0	1	0	1	0	1	0	1
AS2	7609		4	0	4	0	4	0	4	0	4	0	4
AS2	7609	7607	1	0	1	0	1	0	1	0	1	0	1
AS2	7610		1	0	1	0	1	0	1	0	1	0	1
AS2	7612		19	0	19	0	19	0	19	0	19	0	19
AS2	7612	7222	3	0	3	0	3	0	3	0	3	0	3
AS2	7612	7614	1	0	1	0	1	0	1	0	1	0	1
AS2	7613	7616	1	0	1	0	1	0	1	0	1	0	1
AS2	7614		31	0	31	0	31	0	31	0	31	0	31
AS2	7614	7603	1	0	1	0	1	0	1	0	1	0	1
AS2	7614	7607	3	0	3	0	3	0	3	0	3	0	3
AS2	7614	7609	1	0	1	0	1	0	1	0	1	0	1
AS2	7614	7612	1	0	1	0	1	0	1	0	1	0	1
AS2	7614	7616	1	0	1	0	1	0	1	0	1	0	1
AS2	7614	9527	1	0	1	0	1	0	1	0	1	0	1
AS2	7616		4	0	4	0	4	0	4	0	4	0	4
AS3			7	0	7	0	7	0	7	0	7	0	7
AS3	7222		1	0	1	0	1	0	1	0	1	0	1

II.A.5. ANNUAL INCREMENTAL AND CUMULATIVE BILLETS

DESIG/	PNEC/	SNEC/	BILLET	CFY03		FY04		FY05		FY06		FY07	
RATING	PMOS	SMOS	BASE	+/-	CUM	+/-	CUM	+/-	CUM	+/-	CUM	+/-	CUM
AS3	7601		7	0	7	0	7	0	7	0	7	0	7
AS3	7603		8	0	8	0	8	0	8	0	8	0	8
AS3	7606		18	0	18	0	18	0	18	0	18	0	18
AS3	7606	7607	4	0	4	0	4	0	4	0	4	0	4
AS3	7607		18	0	18	0	18	0	18	0	18	0	18
AS3	7607	6712	1	0	1	0	1	0	1	0	1	0	1
AS3	7607	7222	1	0	1	0	1	0	1	0	1	0	1
AS3	7607	7601	1	0	1	0	1	0	1	0	1	0	1
AS3	7607	7606	2	0	2	0	2	0	2	0	2	0	2
AS3	7610		1	0	1	0	1	0	1	0	1	0	1
AS3	7612		22	0	22	0	22	0	22	0	22	0	22
AS3	7612	7222	1	0	1	0	1	0	1	0	1	0	1
AS3	7612	7614	1	0	1	0	1	0	1	0	1	0	1
AS3	7614		25	0	25	0	25	0	25	0	25	0	25
AS3	7614	7603	1	0	1	0	1	0	1	0	1	0	1
AS3	7616		2	0	2	0	2	0	2	0	2	0	2
ASAN			17	0	17	0	17	0	17	0	17	0	17
ASAN	7601		1	0	1	0	1	0	1	0	1	0	1
ASAN	7603		2	0	2	0	2	0	2	0	2	0	2
ASAN	7606		2	0	2	0	2	0	2	0	2	0	2
ASAN	7606	7614	1	0	1	0	1	0	1	0	1	0	1
ASAN	7607		7	0	7	0	7	0	7	0	7	0	7
ASAN	7612		5	0	5	0	5	0	5	0	5	0	5
ASAN	7614		5	0	5	0	5	0	5	0	5	0	5
ATCS			12	0	12	0	12	0	12	0	12	0	12
ATCS	8262		0	0	0	0	0	0	0	0	0	0	0
ATCS	8263		1	0	1	0	1	0	1	0	1	0	1
ATC			35	0	35	0	35	0	35	0	35	0	35
ATC	6635		1	0	1	0	1	0	1	0	1	0	1
ATC	6640	9502	1	0	1	0	1	0	1	0	1	0	1
ATC	6647		1	0	1	0	1	0	1	0	1	0	1
ATC	6664		1	0	1	0	1	0	1	0	1	0	1
ATC	8262		3	0	3	0	3	0	3	0	3	0	3
ATC	8262	9402	1	0	1	0	1	0	1	0	1	0	1
ATC	8284		1	0	1	0	1	0	1	0	1	0	1
ATC	8319		5	0	5	0	5	0	5	0	5	0	5
ATC	9402		2	0	2	0	2	0	2	0	2	0	2
AT1			8	0	8	0	8	0	8	0	8	0	8
AT1		9502	1	0	1	0	1	0	1	0	1	0	1
AT1		9503	9	0	9	0	9	0	9	0	9	0	9
AT1		9526	4	0	4	0	4	0	4	0	4	0	4
AT1		9590	2	0	2	0	2	0	2	0	2	0	2
AT1	6526		2	0	2	0	2	0	2	0	2	0	2
AT1	6527		1	0	1	0	1	0	1	0	1	0	1
AT1	6529		1	0	1	0	1	0	1	0	1	0	1
AT1	6534	9503	1	0	1	0	1	0	1	0	1	0	1
AT1	6605		1	0	1	0	1	0	1	0	1	0	1
AT1	6609		2	0	2	0	2	0	2	0	2	0	2

II.A.5. ANNUAL INCREMENTAL AND CUMULATIVE BILLETS

DESIG/	PNEC/	SNEC/	BILLET	CFY03		FY04		FY05		FY06		FY07	
RATING	PMOS	SMOS	BASE	+/-	CUM	+/-	CUM	+/-	CUM	+/-	CUM	+/-	CUM
AT1	6611		6	0	6	0	6	0	6	0	6	0	6
AT1	6611	6613	1	0	1	0	1	0	1	0	1	0	1
AT1	6612		4	0	4	0	4	0	4	0	4	0	4
AT1	6612	6609	1	0	1	0	1	0	1	0	1	0	1
AT1	6614		1	0	1	0	1	0	1	0	1	0	1
AT1	6615		2	0	2	0	2	0	2	0	2	0	2
AT1	6615	9503	1	0	1	0	1	0	1	0	1	0	1
AT1	6628		1	0	1	0	1	0	1	0	1	0	1
AT1	6633		2	0	2	0	2	0	2	0	2	0	2
AT1	6634		3	0	3	0	3	0	3	0	3	0	3
AT1	6635		1	0	1	0	1	0	1	0	1	0	1
AT1	6635	9526	2	0	2	0	2	0	2	0	2	0	2
AT1	6640	9502	1	0	1	0	1	0	1	0	1	0	1
AT1	6647		1	0	1	0	1	0	1	0	1	0	1
AT1	6664		6	0	6	0	6	0	6	0	6	0	6
AT1	6673		1	0	1	0	1	0	1	0	1	0	1
AT1	6686		1	0	1	0	1	0	1	0	1	0	1
AT1	6689		2	0	2	0	2	0	2	0	2	0	2
AT1	6695		2	0	2	0	2	0	2	0	2	0	2
AT1	6701		1	0	1	0	1	0	1	0	1	0	1
AT1	6701	9595	1	0	1	0	1	0	1	0	1	0	1
AT1	6704		1	0	1	0	1	0	1	0	1	0	1
AT1	6705		5	0	5	0	5	0	5	0	5	0	5
AT1	6710		3	0	3	0	3	0	3	0	3	0	3
AT1	6713		1	0	1	0	1	0	1	0	1	0	1
AT1	6717		3	0	3	0	3	0	3	0	3	0	3
AT1	6717	9526	1	0	1	0	1	0	1	0	1	0	1
AT1	6718		5	0	5	0	5	0	5	0	5	0	5
AT1	6721		8	0	8	0	8	0	8	0	8	0	8
AT1	8262		6	0	6	0	6	0	6	0	6	0	6
AT1	8265		2	0	2	0	2	0	2	0	2	0	2
AT1	8284		3	0	3	0	3	0	3	0	3	0	3
AT1	8319		8	0	8	0	8	0	8	0	8	0	8
AT1	8319	6701	1	0	1	0	1	0	1	0	1	0	1
AT1	8319	9502	1	0	1	0	1	0	1	0	1	0	1
AT1	9402		5	0	5	0	5	0	5	0	5	0	5
AT1	9402	8263	1	0	1	0	1	0	1	0	1	0	1
AT2			10	0	10	0	10	0	10	0	10	0	10
AT2		9526	4	0	4	0	4	0	4	0	4	0	4
AT2		9527	2	0	2	0	2	0	2	0	2	0	2
AT2	6526		4	0	4	0	4	0	4	0	4	0	4
AT2	6527		1	0	1	0	1	0	1	0	1	0	1
AT2	6529		6	0	6	0	6	0	6	0	6	0	6
AT2	6534		3	0	3	0	3	0	3	0	3	0	3
AT2	6582		2	0	2	0	2	0	2	0	2	0	2
AT2	6605		5	0	5	0	5	0	5	0	5	0	5
AT2	6605	6606	1	0	1	0	1	0	1	0	1	0	1
AT2	6605	9527	1	0	1	0	1	0	1	0	1	0	1

II.A.5. ANNUAL INCREMENTAL AND CUMULATIVE BILLETS

DESIG/	PNEC/	SNEC/	BILLET	CFY03		FY04		FY05		FY06		FY07	
RATING	PMOS	SMOS	BASE	+/-	CUM	+/-	CUM	+/-	CUM	+/-	CUM	+/-	CUM
AT2	6606		2	0	2	0	2	0	2	0	2	0	2
AT2	6606	6710	1	0	1	0	1	0	1	0	1	0	1
AT2	6607		2	0	2	0	2	0	2	0	2	0	2
AT2	6609		5	0	5	0	5	0	5	0	5	0	5
AT2	6609	9527	1	0	1	0	1	0	1	0	1	0	1
AT2	6610	9502	1	0	1	0	1	0	1	0	1	0	1
AT2	6611		7	0	7	0	7	0	7	0	7	0	7
AT2	6611	6613	1	0	1	0	1	0	1	0	1	0	1
AT2	6612		7	0	7	0	7	0	7	0	7	0	7
AT2	6612	6710	4	0	4	0	4	0	4	0	4	0	4
AT2	6613		2	0	2	0	2	0	2	0	2	0	2
AT2	6614		1	0	1	0	1	0	1	0	1	0	1
AT2	6615		6	0	6	0	6	0	6	0	6	0	6
AT2	6617	9527	1	0	1	0	1	0	1	0	1	0	1
AT2	6618	9527	3	0	3	0	3	0	3	0	3	0	3
AT2	6629		2	0	2	0	2	0	2	0	2	0	2
AT2	6631		3	0	3	0	3	0	3	0	3	0	3
AT2	6633		8	0	8	0	8	0	8	0	8	0	8
AT2	6634		1	0	1	0	1	0	1	0	1	0	1
AT2	6634	6635	1	0	1	0	1	0	1	0	1	0	1
AT2	6635	9527	2	0	2	0	2	0	2	0	2	0	2
AT2	6639		4	0	4	0	4	0	4	0	4	0	4
AT2	6647		3	0	3	0	3	0	3	0	3	0	3
AT2	6648		3	0	3	0	3	0	3	0	3	0	3
AT2	6664		7	0	7	0	7	0	7	0	7	0	7
AT2	6664	9526	1	0	1	0	1	0	1	0	1	0	1
AT2	6673		9	0	9	0	9	0	9	0	9	0	9
AT2	6673	9526	1	0	1	0	1	0	1	0	1	0	1
AT2	6680		2	0	2	0	2	0	2	0	2	0	2
AT2	6684		2	0	2	0	2	0	2	0	2	0	2
AT2	6686		3	0	3	0	3	0	3	0	3	0	3
AT2	6688		3	0	3	0	3	0	3	0	3	0	3
AT2	6689		4	0	4	0	4	0	4	0	4	0	4
AT2	6694		3	0	3	0	3	0	3	0	3	0	3
AT2	6695		1	0	1	0	1	0	1	0	1	0	1
AT2	6704		15	0	15	0	15	0	15	0	15	0	15
AT2	6705		2	0	2	0	2	0	2	0	2	0	2
AT2	6705	9527	2	0	2	0	2	0	2	0	2	0	2
AT2	6710		3	0	3	0	3	0	3	0	3	0	3
AT2	6713		1	0	1	0	1	0	1	0	1	0	1
AT2	6716		7	0	7	0	7	0	7	0	7	0	7
AT2	6716	9527	1	0	1	0	1	0	1	0	1	0	1
AT2	6717		13	0	13	0	13	0	13	0	13	0	13
AT2	6717	6609	1	0	1	0	1	0	1	0	1	0	1
AT2	6717	6611	1	0	1	0	1	0	1	0	1	0	1
AT2	6718		13	0	13	0	13	0	13	0	13	0	13
AT2	6718	9526	3	0	3	0	3	0	3	0	3	0	3
AT2	6721		13	0	13	0	13	0	13	0	13	0	13

II.A.5. ANNUAL INCREMENTAL AND CUMULATIVE BILLETS

DESIG/	PNEC/	SNEC/	BILLET	CFY03		FY04		FY05		FY06		FY07	
RATING	PMOS	SMOS	BASE	+/-	CUM	+/-	CUM	+/-	CUM	+/-	CUM	+/-	CUM
AT2	6721	9527	1	0	1	0	1	0	1	0	1	0	1
AT2	8262		18	0	18	0	18	0	18	0	18	0	18
AT2	8262	9502	1	0	1	0	1	0	1	0	1	0	1
AT2	8265		1	0	1	0	1	0	1	0	1	0	1
AT2	8284		9	0	9	0	9	0	9	0	9	0	9
AT2	8319		6	0	6	0	6	0	6	0	6	0	6
AT2	9402		11	0	11	0	11	0	11	0	11	0	11
AT2	9402	9502	1	0	1	0	1	0	1	0	1	0	1
AT3			6	0	6	0	6	0	6	0	6	0	6
AT3		9526	3	0	3	0	3	0	3	0	3	0	3
AT3		9527	4	0	4	0	4	0	4	0	4	0	4
AT3	6526		3	0	3	0	3	0	3	0	3	0	3
AT3	6526	9527	1	0	1	0	1	0	1	0	1	0	1
AT3	6527		1	0	1	0	1	0	1	0	1	0	1
AT3	6527	9527	1	0	1	0	1	0	1	0	1	0	1
AT3	6529		3	0	3	0	3	0	3	0	3	0	3
AT3	6534		1	0	1	0	1	0	1	0	1	0	1
AT3	6534	9527	2	0	2	0	2	0	2	0	2	0	2
AT3	6535	9527	1	0	1	0	1	0	1	0	1	0	1
AT3	6605		4	0	4	0	4	0	4	0	4	0	4
AT3	6605	9527	1	0	1	0	1	0	1	0	1	0	1
AT3	6606		2	0	2	0	2	0	2	0	2	0	2
AT3	6606	6605	1	0	1	0	1	0	1	0	1	0	1
AT3	6607		1	0	1	0	1	0	1	0	1	0	1
AT3	6609		13	0	13	0	13	0	13	0	13	0	13
AT3	6611		4	0	4	0	4	0	4	0	4	0	4
AT3	6611	6613	6	0	6	0	6	0	6	0	6	0	6
AT3	6611	9527	1	0	1	0	1	0	1	0	1	0	1
AT3	6612		13	0	13	0	13	0	13	0	13	0	13
AT3	6613		4	0	4	0	4	0	4	0	4	0	4
AT3	6614		2	0	2	0	2	0	2	0	2	0	2
AT3	6615		2	0	2	0	2	0	2	0	2	0	2
AT3	6615	9527	1	0	1	0	1	0	1	0	1	0	1
AT3	6618		2	0	2	0	2	0	2	0	2	0	2
AT3	6619		4	0	4	0	4	0	4	0	4	0	4
AT3	6633		6	0	6	0	6	0	6	0	6	0	6
AT3	6634		6	0	6	0	6	0	6	0	6	0	6
AT3	6634	6529	3	0	3	0	3	0	3	0	3	0	3
AT3	6634	9527	1	0	1	0	1	0	1	0	1	0	1
AT3	6639		3	0	3	0	3	0	3	0	3	0	3
AT3	6647		6	0	6	0	6	0	6	0	6	0	6
AT3	6648		5	0	5	0	5	0	5	0	5	0	5
AT3	6664		4	0	4	0	4	0	4	0	4	0	4
AT3	6673		19	0	19	0	19	0	19	0	19	0	19
AT3	6673	9526	1	0	1	0	1	0	1	0	1	0	1
AT3	6673	9527	1	0	1	0	1	0	1	0	1	0	1
AT3	6680		8	0	8	0	8	0	8	0	8	0	8
AT3	6686		3	0	3	0	3	0	3	0	3	0	3

II.A.5. ANNUAL INCREMENTAL AND CUMULATIVE BILLETS

DESIG/	PNEC/	SNEC/	BILLET	CFY03		FY04		FY05		FY06		FY07	
RATING	PMOS	SMOS	BASE	+/-	CUM	+/-	CUM	+/-	CUM	+/-	CUM	+/-	CUM
AT3	6688		4	0	4	0	4	0	4	0	4	0	4
AT3	6694	9527	1	0	1	0	1	0	1	0	1	0	1
AT3	6704		25	0	25	0	25	0	25	0	25	0	25
AT3	6710		6	0	6	0	6	0	6	0	6	0	6
AT3	6710	6612	1	0	1	0	1	0	1	0	1	0	1
AT3	6713		1	0	1	0	1	0	1	0	1	0	1
AT3	6715		1	0	1	0	1	0	1	0	1	0	1
AT3	6716		5	0	5	0	5	0	5	0	5	0	5
AT3	6716	9527	2	0	2	0	2	0	2	0	2	0	2
AT3	6717		19	0	19	0	19	0	19	0	19	0	19
AT3	6717	9527	3	0	3	0	3	0	3	0	3	0	3
AT3	8262		1	0	1	0	1	0	1	0	1	0	1
AT3	8265		1	0	1	0	1	0	1	0	1	0	1
AT3	8284		3	0	3	0	3	0	3	0	3	0	3
AT3	8819		4	0	4	0	4	0	4	0	4	0	4
AT3	9402		5	0	5	0	5	0	5	0	5	0	5
ATAN			1	0	1	0	1	0	1	0	1	0	1
ATAN	6527		1	0	1	0	1	0	1	0	1	0	1
ATAN	6605		1	0	1	0	1	0	1	0	1	0	1
ATAN	6605	6710	2	0	2	0	2	0	2	0	2	0	2
ATAN	6606		1	0	1	0	1	0	1	0	1	0	1
ATAN	6609		2	0	2	0	2	0	2	0	2	0	2
ATAN	6609	6717	3	0	3	0	3	0	3	0	3	0	3
ATAN	6611		4	0	4	0	4	0	4	0	4	0	4
ATAN	6612		2	0	2	0	2	0	2	0	2	0	2
ATAN	6612	6710	1	0	1	0	1	0	1	0	1	0	1
ATAN	6613		2	0	2	0	2	0	2	0	2	0	2
ATAN	6614		1	0	1	0	1	0	1	0	1	0	1
ATAN	6634		1	0	1	0	1	0	1	0	1	0	1
ATAN	6673		4	0	4	0	4	0	4	0	4	0	4
ATAN	6686		1	0	1	0	1	0	1	0	1	0	1
ATAN	6704		4	0	4	0	4	0	4	0	4	0	4
ATAN	6710		3	0	3	0	3	0	3	0	3	0	3
ATAN	6715		1	0	1	0	1	0	1	0	1	0	1
ATAN	6716		2	0	2	0	2	0	2	0	2	0	2
ATAN	6717		6	0	6	0	6	0	6	0	6	0	6
ATAN	8819		8	0	8	0	8	0	8	0	8	0	8
AVCM			2	0	2	0	2	0	2	0	2	0	2
AVCM	8300		3	0	3	0	3	0	3	0	3	0	3
AWCS			1	0	1	0	1	0	1	0	1	0	1
AWCS	7821		1	0	1	0	1	0	1	0	1	0	1
AWCS	7841		1	0	1	0	1	0	1	0	1	0	1
AWCS	7861		0	0	0	0	0	0	0	0	0	0	0
AWCS	7861	9502	1	0	1	0	1	0	1	0	1	0	1
AWC	7836	7841	4	0	4	0	4	0	4	0	4	0	4
AWC	7841		5	0	5	0	5	0	5	0	5	0	5
AWC	7841	7861	1	0	1	0	1	0	1	0	1	0	1
AWC	7841	9502	4	0	4	0	4	0	4	0	4	0	4

II.A.5. ANNUAL INCREMENTAL AND CUMULATIVE BILLETS

DESIG/	PNEC/	SNEC/	BILLET	CFY03		FY04		FY05		FY06		FY07	
RATING	PMOS	SMOS	BASE	+/-	CUM	+/-	CUM	+/-	CUM	+/-	CUM	+/-	CUM
AWC	7861		4	0	4	0	4	0	4	0	4	0	4
AW1	7821		3	0	3	0	3	0	3	0	3	0	3
AW1	7821	9502	1	0	1	0	1	0	1	0	1	0	1
AW1	7835	7841	3	0	3	0	3	0	3	0	3	0	3
AW1	7835	7861	3	0	3	0	3	0	3	0	3	0	3
AW1	7841		4	0	4	0	4	0	4	0	4	0	4
AW1	7841	9502	7	0	7	0	7	0	7	0	7	0	7
AW1	7861		1	0	1	0	1	0	1	0	1	0	1
AW1	7861	9502	6	0	6	0	6	0	6	0	6	0	6
AW2	7835	7841	2	0	2	0	2	0	2	0	2	0	2
AW2	7835	7861	2	0	2	0	2	0	2	0	2	0	2
AW2	7841		3	0	3	0	3	0	3	0	3	0	3
AW2	7841	9502	3	0	3	0	3	0	3	0	3	0	3
AW2	7861		2	0	2	0	2	0	2	0	2	0	2
AW2	7861	9502	2	0	2	0	2	0	2	0	2	0	2
AW3	7841		2	0	2	0	2	0	2	0	2	0	2
AWAN	7841		1	0	1	0	1	0	1	0	1	0	1
AZC			10	0	10	0	10	0	10	0	10	0	10
AZC	6314		1	0	1	0	1	0	1	0	1	0	1
AZC	6315		4	0	4	0	4	0	4	0	4	0	4
AZ1			27	0	27	0	27	0	27	0	27	0	27
AZ1	6314		10	0	10	0	10	0	10	0	10	0	10
AZ1	6315		3	0	3	0	3	0	3	0	3	0	3
AZ2			84	0	84	0	84	0	84	0	84	0	84
AZ2	6303		2	0	2	0	2	0	2	0	2	0	2
AZ2	6314		7	0	7	0	7	0	7	0	7	0	7
AZ3			61	0	61	0	61	0	61	0	61	0	61
AZ3	6301		1	0	1	0	1	0	1	0	1	0	1
AZAN			6	0	6	0	6	0	6	0	6	0	6
CTAC	9190		1	0	1	0	1	0	1	0	1	0	1
CTA1		9190	1	0	1	0	1	0	1	0	1	0	1
CTA1	9190		1	0	1	0	1	0	1	0	1	0	1
CTO1			1	0	1	0	1	0	1	0	1	0	1
CTT1	9102	8295	1	0	1	0	1	0	1	0	1	0	1
DK2			1	0	1	0	1	0	1	0	1	0	1
DK2	2905		1	0	1	0	1	0	1	0	1	0	1
DM2			1	0	1	0	1	0	1	0	1	0	1
ETC	1685	9512	1	0	1	0	1	0	1	0	1	0	1
ET2			2	0	2	0	2	0	2	0	2	0	2
ET2	1613	2750	1	0	1	0	1	0	1	0	1	0	1
ET2	1677		3	0	3	0	3	0	3	0	3	0	3
ET2	2750		1	0	1	0	1	0	1	0	1	0	1
ET3	1677		1	0	1	0	1	0	1	0	1	0	1
FC3	1677		1	0	1	0	1	0	1	0	1	0	1
HM2	8406		2	0	2	0	2	0	2	0	2	0	2
ISC	3910		3	0	3	0	3	0	3	0	3	0	3
IS1	3910	3924	3	0	3	0	3	0	3	0	3	0	3
IS1	3924		8	0	8	0	8	0	8	0	8	0	8

II.A.5. ANNUAL INCREMENTAL AND CUMULATIVE BILLETS

DESIG/ RATING	PNEC/ PMOS	SNEC/ SMOS	BILLET BASE	CFY03 +/-	CFY03 CUM	FY04 +/-	FY04 CUM	FY05 +/-	FY05 CUM	FY06 +/-	FY06 CUM	FY07 +/-	FY07 CUM
IS2			3	0	3	0	3	0	3	0	3	0	3
IS2	3905		1	0	1	0	1	0	1	0	1	0	1
IS3			1	0	1	0	1	0	1	0	1	0	1
ITC	2735		2	0	2	0	2	0	2	0	2	0	2
IT1			1	0	1	0	1	0	1	0	1	0	1
IT1	2735		4	0	4	0	4	0	4	0	4	0	4
IT1	2781		1	0	1	0	1	0	1	0	1	0	1
IT2			2	0	2	0	2	0	2	0	2	0	2
IT2	2735		6	0	6	0	6	0	6	0	6	0	6
IT2	2750		1	0	1	0	1	0	1	0	1	0	1
IT2	2780		1	0	1	0	1	0	1	0	1	0	1
IT3			1	0	1	0	1	0	1	0	1	0	1
IT3	2735		1	0	1	0	1	0	1	0	1	0	1
LN1			1	0	1	0	1	0	1	0	1	0	1
MMC			1	0	1	0	1	0	1	0	1	0	1
MM1	4201		1	0	1	0	1	0	1	0	1	0	1
MM1	4283		1	0	1	0	1	0	1	0	1	0	1
MM2	4201		3	0	3	0	3	0	3	0	3	0	3
MM2	4283		3	0	3	0	3	0	3	0	3	0	3
MM3	4201		4	0	4	0	4	0	4	0	4	0	4
MM3	4283		2	0	2	0	2	0	2	0	2	0	2
MR1			3	0	3	0	3	0	3	0	3	0	3
MR1	4402		2	0	2	0	2	0	2	0	2	0	2
MR2			5	0	5	0	5	0	5	0	5	0	5
MR2	4402		2	0	2	0	2	0	2	0	2	0	2
MR2	4404		1	0	1	0	1	0	1	0	1	0	1
MR3			4	0	4	0	4	0	4	0	4	0	4
NCC			4	0	4	0	4	0	4	0	4	0	4
NC1			5	0	5	0	5	0	5	0	5	0	5
OSC			1	0	1	0	1	0	1	0	1	0	1
PH1	8288		4	0	4	0	4	0	4	0	4	0	4
PH2	8143		1	0	1	0	1	0	1	0	1	0	1
PH2	8193		1	0	1	0	1	0	1	0	1	0	1
PH2	8288		4	0	4	0	4	0	4	0	4	0	4
PH3	8288		1	0	1	0	1	0	1	0	1	0	1
PHAN	8288		1	0	1	0	1	0	1	0	1	0	1
PNC			2	0	2	0	2	0	2	0	2	0	2
PN1			3	0	3	0	3	0	3	0	3	0	3
PN2			4	0	4	0	4	0	4	0	4	0	4
PN3			2	0	2	0	2	0	2	0	2	0	2
PNSN			1	0	1	0	1	0	1	0	1	0	1
POCM		9580	4	0	4	0	4	0	4	0	4	0	4
POC		9515	1	0	1	0	1	0	1	0	1	0	1
POC		9519	1	0	1	0	1	0	1	0	1	0	1
PO1		9571	1	0	1	0	1	0	1	0	1	0	1
PO1		9595	1	0	1	0	1	0	1	0	1	0	1
PO1	6673		2	0	2	0	2	0	2	0	2	0	2
PO2	6673		3	0	3	0	3	0	3	0	3	0	3

II.A.5. ANNUAL INCREMENTAL AND CUMULATIVE BILLETS

DESIG/ RATING	PNEC/ PMOS	SNEC/ SMOS	BILLET BASE	CFY03 +/-	CFY03 CUM	FY04 +/-	FY04 CUM	FY05 +/-	FY05 CUM	FY06 +/-	FY06 CUM	FY07 +/-	FY07 CUM
PO2	6673	9526	2	0	2	0	2	0	2	0	2	0	2
PO2	6718		7	0	7	0	7	0	7	0	7	0	7
PO3			2	0	2	0	2	0	2	0	2	0	2
PO3	6673		4	0	4	0	4	0	4	0	4	0	4
PRCS			2	0	2	0	2	0	2	0	2	0	2
PRC			5	0	5	0	5	0	5	0	5	0	5
PR1			22	0	22	0	22	0	22	0	22	0	22
PR1	7356		12	0	12	0	12	0	12	0	12	0	12
PR2			25	0	25	0	25	0	25	0	25	0	25
PR2	7356		18	0	18	0	18	0	18	0	18	0	18
PR3			29	0	29	0	29	0	29	0	29	0	29
PR3	7356		5	0	5	0	5	0	5	0	5	0	5
PRAN			7	0	7	0	7	0	7	0	7	0	7
SKCS			1	0	1	0	1	0	1	0	1	0	1
SKC			5	0	5	0	5	0	5	0	5	0	5
SKC	8012		5	0	5	0	5	0	5	0	5	0	5
TM2			1	0	1	0	1	0	1	0	1	0	1
TM3			1	0	1	0	1	0	1	0	1	0	1
YNCM			1	0	1	0	1	0	1	0	1	0	1
YNCS	2514		1	0	1	0	1	0	1	0	1	0	1
YNC			7	0	7	0	7	0	7	0	7	0	7
YNC		9588	1	0	1	0	1	0	1	0	1	0	1
YN1			4	0	4	0	4	0	4	0	4	0	4
YN2			12	0	12	0	12	0	12	0	12	0	12
YN3			8	0	8	0	8	0	8	0	8	0	8
YNSN			6	0	6	0	6	0	6	0	6	0	6
AN			28	0	28	0	28	0	28	0	28	0	28
Staff Billets ACDU and TAR													
ADC	6418	9502	1	0	1	0	1	0	1	0	1	0	1
ADC	8251	9502	1	0	1	0	1	0	1	0	1	0	1
ADC	8319	9502	2	0	2	0	2	0	2	0	2	0	2
AD1	6418	9502	6	0	6	0	6	0	6	0	6	0	6
AD1	8319	9502	2	0	2	0	2	0	2	0	2	0	2
AD2	6418	9502	2	0	2	0	2	0	2	0	2	0	2
AD2	8319	9502	2	0	2	0	2	0	2	0	2	0	2
AEC	8319		1	0	1	0	1	0	1	0	1	0	1
AEC	8319	9502	2	0	2	0	2	0	2	0	2	0	2
AE1	7136	9502	3	0	3	0	3	0	3	0	3	0	3
AE1	7137	9502	1	0	1	0	1	0	1	0	1	0	1
AE1	7175	9502	1	0	1	0	1	0	1	0	1	0	1
AE1	8251	9502	1	0	1	0	1	0	1	0	1	0	1
AE1	8319	9502	4	0	4	0	4	0	4	0	4	0	4
AE2	7137	9502	2	0	2	0	2	0	2	0	2	0	2
AE2	8319	9502	2	0	2	0	2	0	2	0	2	0	2
AMC	8319	9502	1	0	1	0	1	0	1	0	1	0	1
AM1	8251	9502	1	0	1	0	1	0	1	0	1	0	1
AM1	8319	9502	2	0	2	0	2	0	2	0	2	0	2

II.A.5. ANNUAL INCREMENTAL AND CUMULATIVE BILLETS

DESIG/	PNEC/	SNEC/	BILLET	CFY03		FY04		FY05		FY06		FY07	
RATING	PMOS	SMOS	BASE	+/-	CUM	+/-	CUM	+/-	CUM	+/-	CUM	+/-	CUM
AM2	8319	9502	1	0	1	0	1	0	1	0	1	0	1
AME1	8319	9502	3	0	3	0	3	0	3	0	3	0	3
AOC	8319	9502	1	0	1	0	1	0	1	0	1	0	1
AO1	8319	9502	4	0	4	0	4	0	4	0	4	0	4
AO2	8319	9502	2	0	2	0	2	0	2	0	2	0	2
ASC	7609	9502	1	0	1	0	1	0	1	0	1	0	1
AS1	7601	9502	2	0	2	0	2	0	2	0	2	0	2
AS1	7603	9502	1	0	1	0	1	0	1	0	1	0	1
AS1	7606	9502	1	0	1	0	1	0	1	0	1	0	1
AS1	7607	9502	1	0	1	0	1	0	1	0	1	0	1
AS1	7609	9502	1	0	1	0	1	0	1	0	1	0	1
AS1	7610	9502	1	0	1	0	1	0	1	0	1	0	1
AS1	7612	9502	1	0	1	0	1	0	1	0	1	0	1
AS1	7613	9502	1	0	1	0	1	0	1	0	1	0	1
AS1	7614	9502	3	0	3	0	3	0	3	0	3	0	3
AS2	7606	9502	1	0	1	0	1	0	1	0	1	0	1
AS2	7610	9502	1	0	1	0	1	0	1	0	1	0	1
AS2	7614	9527	1	0	1	0	1	0	1	0	1	0	1
ATCS	8262	9502	1	0	1	0	1	0	1	0	1	0	1
ATCS	9402	9502	1	0	1	0	1	0	1	0	1	0	1
ATC	6534	9502	1	0	1	0	1	0	1	0	1	0	1
ATC	6615	9502	2	0	2	0	2	0	2	0	2	0	2
ATC	6635		1	0	1	0	1	0	1	0	1	0	1
ATC	8319	9502	3	0	3	0	3	0	3	0	3	0	3
ATC	9402	9502	2	0	2	0	2	0	2	0	2	0	2
AT1	6526	9502	2	0	2	0	2	0	2	0	2	0	2
AT1	6529	9502	4	0	4	0	4	0	4	0	4	0	4
AT1	6534	9502	2	0	2	0	2	0	2	0	2	0	2
AT1	6605	9502	2	0	2	0	2	0	2	0	2	0	2
AT1	6606	9502	1	0	1	0	1	0	1	0	1	0	1
AT1	6609	9502	2	0	2	0	2	0	2	0	2	0	2
AT1	6610	9502	1	0	1	0	1	0	1	0	1	0	1
AT1	6615	9502	3	0	3	0	3	0	3	0	3	0	3
AT1	6664	9502	4	0	4	0	4	0	4	0	4	0	4
AT1	6710	9502	2	0	2	0	2	0	2	0	2	0	2
AT1	6717	9502	3	0	3	0	3	0	3	0	3	0	3
AT1	6719	9502	2	0	2	0	2	0	2	0	2	0	2
AT1	6721	9502	5	0	5	0	5	0	5	0	5	0	5
AT1	8262	9502	2	0	2	0	2	0	2	0	2	0	2
AT1	8319	9502	8	0	8	0	8	0	8	0	8	0	8
AT2	6526	9502	2	0	2	0	2	0	2	0	2	0	2
AT2	6606	9502	1	0	1	0	1	0	1	0	1	0	1
AT2	6609	9502	1	0	1	0	1	0	1	0	1	0	1
AT2	6610	9502	1	0	1	0	1	0	1	0	1	0	1
AT2	6635	9502	1	0	1	0	1	0	1	0	1	0	1
AT2	6717	9502	2	0	2	0	2	0	2	0	2	0	2
AT2	6721	9502	2	0	2	0	2	0	2	0	2	0	2
AT2	8262	9502	4	0	4	0	4	0	4	0	4	0	4

II.A.5. ANNUAL INCREMENTAL AND CUMULATIVE BILLETS

DESIG/ RATING	PNEC/ PMOS	SNEC/ SMOS	BILLET BASE	CFY03 +/-	CFY03 CUM	FY04 +/-	FY04 CUM	FY05 +/-	FY05 CUM	FY06 +/-	FY06 CUM	FY07 +/-	FY07 CUM
	9402	9502	0	2	2	0	2	0	2	0	2	0	2
Chargeable Student Billets ACDU and TAR													
			295	0	295	0	295	0	295	0	295	0	295
SELRES Billets													
AD1			3	0	3	0	3	0	3	0	3	0	3
AD1	6418		4	0	4	0	4	0	4	0	4	0	4
AD2			22	0	22	0	22	0	22	0	22	0	22
AD2	6418		6	0	6	0	6	0	6	0	6	0	6
AD2	8319		7	0	7	0	7	0	7	0	7	0	7
AD3			16	0	16	0	16	0	16	0	16	0	16
AD3	6418		5	0	5	0	5	0	5	0	5	0	5
AD3	8819		10	0	10	0	10	0	10	0	10	0	10
ADAN	6418		4	0	4	0	4	0	4	0	4	0	4
ADAN	8819		25	0	25	0	25	0	25	0	25	0	25
AE1			1	0	1	0	1	0	1	0	1	0	1
AE1	7144		1	0	1	0	1	0	1	0	1	0	1
AE1	7175		1	0	1	0	1	0	1	0	1	0	1
AE2			3	0	3	0	3	0	3	0	3	0	3
AE2	7105		1	0	1	0	1	0	1	0	1	0	1
AE2	7105	7144	1	0	1	0	1	0	1	0	1	0	1
AE2	7136		2	0	2	0	2	0	2	0	2	0	2
AE2	7137		1	0	1	0	1	0	1	0	1	0	1
AE2	7175		2	0	2	0	2	0	2	0	2	0	2
AE3			1	0	1	0	1	0	1	0	1	0	1
AE3	7175		1	0	1	0	1	0	1	0	1	0	1
AE3	8819		7	0	7	0	7	0	7	0	7	0	7
AEAN	8819		17	0	17	0	17	0	17	0	17	0	17
AK1			2	0	2	0	2	0	2	0	2	0	2
AK1		9590	3	0	3	0	3	0	3	0	3	0	3
AK2			8	0	8	0	8	0	8	0	8	0	8
AK2		9590	3	0	3	0	3	0	3	0	3	0	3
AK3			11	0	11	0	11	0	11	0	11	0	11
AKAN			4	0	4	0	4	0	4	0	4	0	4
AM1			1	0	1	0	1	0	1	0	1	0	1
AM1	8319		14	0	14	0	14	0	14	0	14	0	14
AM2			3	0	3	0	3	0	3	0	3	0	3
AM2	7212		3	0	3	0	3	0	3	0	3	0	3
AM2	7222		3	0	3	0	3	0	3	0	3	0	3
AM2	7225		3	0	3	0	3	0	3	0	3	0	3
AM2	8319		7	0	7	0	7	0	7	0	7	0	7
AM3			6	0	6	0	6	0	6	0	6	0	6
AM3	7213		4	0	4	0	4	0	4	0	4	0	4
AM3	8819		7	0	7	0	7	0	7	0	7	0	7
AMAN			4	0	4	0	4	0	4	0	4	0	4
AMAN	8819		35	0	35	0	35	0	35	0	35	0	35
AME1	8319		7	0	7	0	7	0	7	0	7	0	7

II.A.5. ANNUAL INCREMENTAL AND CUMULATIVE BILLETS

DESIG/	PNEC/	SNEC/	BILLET	CFY03		FY04		FY05		FY06		FY07	
RATING	PMOS	SMOS	BASE	+/-	CUM	+/-	CUM	+/-	CUM	+/-	CUM	+/-	CUM
AME3	8319		7	0	7	0	7	0	7	0	7	0	7
AMEAN	8319		11	0	11	0	11	0	11	0	11	0	11
AOC	8271		7	0	7	0	7	0	7	0	7	0	7
AO1			1	0	1	0	1	0	1	0	1	0	1
AO1	6802		6	0	6	0	6	0	6	0	6	0	6
AO1	8271		7	0	7	0	7	0	7	0	7	0	7
AO1	8319	0812	7	0	7	0	7	0	7	0	7	0	7
AO2			2	0	2	0	2	0	2	0	2	0	2
AO2	6802		2	0	2	0	2	0	2	0	2	0	2
AO2	8271		21	0	21	0	21	0	21	0	21	0	21
AO2	8319		3	0	3	0	3	0	3	0	3	0	3
AO3			12	0	12	0	12	0	12	0	12	0	12
AO3	8271		25	0	25	0	25	0	25	0	25	0	25
AOAN			14	0	14	0	14	0	14	0	14	0	14
AOAN	8271		21	0	21	0	21	0	21	0	21	0	21
AOAN	8319		6	0	6	0	6	0	6	0	6	0	6
APOCM	8300		7	0	7	0	7	0	7	0	7	0	7
APOCS			14	0	14	0	14	0	14	0	14	0	14
APOCS	8251		7	0	7	0	7	0	7	0	7	0	7
APOC			1	0	1	0	1	0	1	0	1	0	1
APO1			29	0	29	0	29	0	29	0	29	0	29
APO1	8251		16	0	16	0	16	0	16	0	16	0	16
APO2	8251		71	0	71	0	71	0	71	0	71	0	71
APO3			7	0	7	0	7	0	7	0	7	0	7
ASC			1	0	1	0	1	0	1	0	1	0	1
AS1			3	0	3	0	3	0	3	0	3	0	3
AS1	7609		4	0	4	0	4	0	4	0	4	0	4
AS2			13	0	13	0	13	0	13	0	13	0	13
AS2	7601		1	0	1	0	1	0	1	0	1	0	1
AS2	7607		1	0	1	0	1	0	1	0	1	0	1
AS2	7614		3	0	3	0	3	0	3	0	3	0	3
AS3			15	0	15	0	15	0	15	0	15	0	15
AS3	7601		1	0	1	0	1	0	1	0	1	0	1
AS3	7603		1	0	1	0	1	0	1	0	1	0	1
AS3	7606		2	0	2	0	2	0	2	0	2	0	2
AS3	7607		2	0	2	0	2	0	2	0	2	0	2
AS3	7614		1	0	1	0	1	0	1	0	1	0	1
ASAN	7603		2	0	2	0	2	0	2	0	2	0	2
ATC			1	0	1	0	1	0	1	0	1	0	1
AT1			3	0	3	0	3	0	3	0	3	0	3
AT1	6529		1	0	1	0	1	0	1	0	1	0	1
AT1	6606		1	0	1	0	1	0	1	0	1	0	1
AT1	6611		2	0	2	0	2	0	2	0	2	0	2
AT1	6615		1	0	1	0	1	0	1	0	1	0	1
AT1	6640	9502	1	0	1	0	1	0	1	0	1	0	1
AT1	6710		1	0	1	0	1	0	1	0	1	0	1
AT1	8262		7	0	7	0	7	0	7	0	7	0	7
AT2			7	0	7	0	7	0	7	0	7	0	7

II.A.5. ANNUAL INCREMENTAL AND CUMULATIVE BILLETS

DESIG/ RATING	PNEC/ PMOS	SNEC/ SMOS	BILLET BASE	CFY03 +/-	CFY03 CUM	FY04 +/-	FY04 CUM	FY05 +/-	FY05 CUM	FY06 +/-	FY06 CUM	FY07 +/-	FY07 CUM
AT2		9526	4	0	4	0	4	0	4	0	4	0	4
AT2	6529		1	0	1	0	1	0	1	0	1	0	1
AT2	6534		1	0	1	0	1	0	1	0	1	0	1
AT2	6612		14	0	14	0	14	0	14	0	14	0	14
AT2	6615		1	0	1	0	1	0	1	0	1	0	1
AT2	6617		4	0	4	0	4	0	4	0	4	0	4
AT2	6629		1	0	1	0	1	0	1	0	1	0	1
AT2	6664		2	0	2	0	2	0	2	0	2	0	2
AT2	6673		9	0	9	0	9	0	9	0	9	0	9
AT2	6688		1	0	1	0	1	0	1	0	1	0	1
AT2	6695		1	0	1	0	1	0	1	0	1	0	1
AT2	6710		1	0	1	0	1	0	1	0	1	0	1
AT2	6716		2	0	2	0	2	0	2	0	2	0	2
AT2	6717		2	0	2	0	2	0	2	0	2	0	2
AT2	6718		3	0	3	0	3	0	3	0	3	0	3
AT2	8262		6	0	6	0	6	0	6	0	6	0	6
AT2	8319		7	0	7	0	7	0	7	0	7	0	7
AT3			6	0	6	0	6	0	6	0	6	0	6
AT3		9527	4	0	4	0	4	0	4	0	4	0	4
AT3	6529		2	0	2	0	2	0	2	0	2	0	2
AT3	6534	9527	4	0	4	0	4	0	4	0	4	0	4
AT3	6605		7	0	7	0	7	0	7	0	7	0	7
AT3	6612		4	0	4	0	4	0	4	0	4	0	4
AT3	6664		4	0	4	0	4	0	4	0	4	0	4
AT3	6673		1	0	1	0	1	0	1	0	1	0	1
AT3	6694		1	0	1	0	1	0	1	0	1	0	1
AT3	6717		2	0	2	0	2	0	2	0	2	0	2
AT3	8262		28	0	28	0	28	0	28	0	28	0	28
AT3	8819		24	0	24	0	24	0	24	0	24	0	24
ATAN	6605	6606	3	0	3	0	3	0	3	0	3	0	3
ATAN	6606		1	0	1	0	1	0	1	0	1	0	1
ATAN	6710		4	0	4	0	4	0	4	0	4	0	4
ATAN	6716		4	0	4	0	4	0	4	0	4	0	4
ATAN	6717		8	0	8	0	8	0	8	0	8	0	8
ATAN	8819		11	0	11	0	11	0	11	0	11	0	11
AWCS	7821		4	0	4	0	4	0	4	0	4	0	4
AWCS	7841		3	0	3	0	3	0	3	0	3	0	3
AWC			1	0	1	0	1	0	1	0	1	0	1
AWC	7861		7	0	7	0	7	0	7	0	7	0	7
AW1	7821		8	0	8	0	8	0	8	0	8	0	8
AW1	7841		6	0	6	0	6	0	6	0	6	0	6
AW1	7861		10	0	10	0	10	0	10	0	10	0	10
AW2	7821		24	0	24	0	24	0	24	0	24	0	24
AW2	7841		21	0	21	0	21	0	21	0	21	0	21
AW2	7861		25	0	25	0	25	0	25	0	25	0	25
AW3	7821		32	0	32	0	32	0	32	0	32	0	32
AW3	7841		21	0	21	0	21	0	21	0	21	0	21
AW3	7861		21	0	21	0	21	0	21	0	21	0	21

II.A.5. ANNUAL INCREMENTAL AND CUMULATIVE BILLETS

DESIG/ RATING	PNEC/ PMOS	SNEC/ SMOS	BILLET BASE	CFY03 +/-	CFY03 CUM	FY04 +/-	FY04 CUM	FY05 +/-	FY05 CUM	FY06 +/-	FY06 CUM	FY07 +/-	FY07 CUM
AWAN	7821		20	0	20	0	20	0	20	0	20	0	20
AWAN	7841		15	0	15	0	15	0	15	0	15	0	15
AWAN	7861		14	0	14	0	14	0	14	0	14	0	14
AZ1			2	0	2	0	2	0	2	0	2	0	2
AZ1	6315		1	0	1	0	1	0	1	0	1	0	1
AZ2			10	0	10	0	10	0	10	0	10	0	10
AZ3			15	0	15	0	15	0	15	0	15	0	15
AZAN			7	0	7	0	7	0	7	0	7	0	7
DK2			8	0	8	0	8	0	8	0	8	0	8
DK3			7	0	7	0	7	0	7	0	7	0	7
ET1			1	0	1	0	1	0	1	0	1	0	1
HM3	8406		7	0	7	0	7	0	7	0	7	0	7
IS1			7	0	7	0	7	0	7	0	7	0	7
IS1	3924		2	0	2	0	2	0	2	0	2	0	2
ISSN			14	0	14	0	14	0	14	0	14	0	14
ITC	2735		1	0	1	0	1	0	1	0	1	0	1
IT1	2781		3	0	3	0	3	0	3	0	3	0	3
MS2			14	0	14	0	14	0	14	0	14	0	14
MS3			7	0	7	0	7	0	7	0	7	0	7
MSSN			21	0	21	0	21	0	21	0	21	0	21
OSC			1	0	1	0	1	0	1	0	1	0	1
PH2	8143		7	0	7	0	7	0	7	0	7	0	7
PH2	8288		7	0	7	0	7	0	7	0	7	0	7
PH3	8133		7	0	7	0	7	0	7	0	7	0	7
PN1			7	0	7	0	7	0	7	0	7	0	7
PN3			10	0	10	0	10	0	10	0	10	0	10
PO2	6718		35	0	35	0	35	0	35	0	35	0	35
PO3			7	0	7	0	7	0	7	0	7	0	7
PR1			3	0	3	0	3	0	3	0	3	0	3
PR2			14	0	14	0	14	0	14	0	14	0	14
PR3			3	0	3	0	3	0	3	0	3	0	3
SKC			2	0	2	0	2	0	2	0	2	0	2
YNC			1	0	1	0	1	0	1	0	1	0	1
YN1			2	0	2	0	2	0	2	0	2	0	2
YN2			3	0	3	0	3	0	3	0	3	0	3
YNSN			14	0	14	0	14	0	14	0	14	0	14
AN			140	0	140	0	140	0	140	0	140	0	140
TOTAL USN ENLISTED BILLETS:													
Operational			6544	2	6546	0	6546	0	6546	0	6546	0	6546
Fleet Support			3197	0	3197	0	3197	0	3197	0	3197	0	3197
Staff			132	2	134	0	134	0	134	0	134	0	134

II.A.5. ANNUAL INCREMENTAL AND CUMULATIVE BILLETS

DESIG/ RATING	PNEC/ PMOS	SNEC/ SMOS	BILLET BASE	CFY03 +/-	CFY03 CUM	FY04 +/-	FY04 CUM	FY05 +/-	FY05 CUM	FY06 +/-	FY06 CUM	FY07 +/-	FY07 CUM
Chargeable Student			295	0	295	0	295	0	295	0	295	0	295
SELRES			1448	0	1448	0	1448	0	1448	0	1448	0	1448

c. OFFICER - USMC Not Applicable

d. ENLISTED - USMC Not Applicable

II.B. ANNUAL TRAINING INPUT REQUIREMENTS

CIN, COURSE TITLE: D-2A-1104, P-3C Update Replacement Pilot Category 4
COURSE LENGTH: 2.0 Weeks **NAVY TOUR LENGTH:** 36 Months
ATTRITION FACTOR: Navy: 0% **BACKOUT FACTOR:** 0.00

TRAINING		ACDU/TAR	CFY03		FY04		FY05		FY06		FY07	
ACTIVITY	SOURCE	SELRES	OFF	ENL	OFF	ENL	OFF	ENL	OFF	ENL	OFF	ENL
VP-30 Fleet Replacement Squadron, NAS Jacksonville												
	USN	ACDU	40		40		40		40		40	
		TAR	4		4		4		4		4	
		SELRES	5		5		5		5		5	
		TOTAL:	49		49		49		49		49	

CIN, COURSE TITLE: D-2A-1111, P-3C Update Fleet Replacement Pilot Category 1 Pipeline
COURSE LENGTH: 26.4 Weeks **NAVY TOUR LENGTH:** 36 Months
ATTRITION FACTOR: Navy: 0% **BACKOUT FACTOR:** 0.53

TRAINING		ACDU/TAR	CFY03		FY04		FY05		FY06		FY07	
ACTIVITY	SOURCE	SELRES	OFF	ENL	OFF	ENL	OFF	ENL	OFF	ENL	OFF	ENL
VP-30 Fleet Replacement Squadron, NAS Jacksonville												
	USN	ACDU	42		42		42		42		42	
		TAR	4		4		4		4		4	
		SELRES	5		5		5		5		5	
		TOTAL:	51		51		51		51		51	

CIN, COURSE TITLE: D-2A-1112, P-3 Fleet Replacement Pilot Category 3 Pipeline
COURSE LENGTH: 21.4 Weeks **NAVY TOUR LENGTH:** 36 Months
ATTRITION FACTOR: Navy: 0% **BACKOUT FACTOR:** 0.43

TRAINING		ACDU/TAR	CFY03		FY04		FY05		FY06		FY07	
ACTIVITY	SOURCE	SELRES	OFF	ENL	OFF	ENL	OFF	ENL	OFF	ENL	OFF	ENL
VP-30 Fleet Replacement Squadron, NAS Jacksonville												
	USN	ACDU	42		42		42		42		42	
		TAR	4		4		4		4		4	
		SELRES	5		5		5		5		5	
		TOTAL:	51		51		51		51		51	

CIN, COURSE TITLE: D-2A-1113, P-3C Update Fleet Replacement Pilot Category 5 Pipeline
COURSE LENGTH: 4.4 Weeks **NAVY TOUR LENGTH:** 36 Months
ATTRITION FACTOR: Navy: 0% **BACKOUT FACTOR:** 0.09

TRAINING		ACDU/TAR	CFY03		FY04		FY05		FY06		FY07	
ACTIVITY	SOURCE	SELRES	OFF	ENL	OFF	ENL	OFF	ENL	OFF	ENL	OFF	ENL
VP-30 Fleet Replacement Squadron, NAS Jacksonville												
	USN	ACDU	37		37		37		37		37	
		TAR	3		3		3		3		3	
		SELRES	4		4		4		4		4	
		TOTAL:	44		44		44		44		44	

II.B. ANNUAL TRAINING INPUT REQUIREMENTS

CIN, COURSE TITLE: D-2A-1115, P-3 Fleet Replacement Pilot (Non-USW) Category 1 Pipeline
COURSE LENGTH: 17.0 Weeks **NAVY TOUR LENGTH:** 36 Months
ATTRITION FACTOR: Navy: 0% **BACKOUT FACTOR:** 0.34

TRAINING		ACDU/TAR	CFY03		FY04		FY05		FY06		FY07	
ACTIVITY	SOURCE	SELRES	OFF	ENL	OFF	ENL	OFF	ENL	OFF	ENL	OFF	ENL
VP-30 Fleet Replacement Squadron, NAS Jacksonville												
	USN	ACDU	91		91		91		91		91	
		TAR	7		7		7		7		7	
		SELRES	9		9		9		9		9	
		TOTAL:	107		107		107		107		107	

CIN, COURSE TITLE: D-2A-1116, P-3C Fleet Replacement Pilot (Non-USW) Category 3 Pipeline
COURSE LENGTH: 19.8 Weeks **NAVY TOUR LENGTH:** 36 Months
ATTRITION FACTOR: Navy: 0% **BACKOUT FACTOR:** 0.40

TRAINING		ACDU/TAR	CFY03		FY04		FY05		FY06		FY07	
ACTIVITY	SOURCE	SELRES	OFF	ENL	OFF	ENL	OFF	ENL	OFF	ENL	OFF	ENL
VP-30 Fleet Replacement Squadron, NAS Jacksonville												
	USN	ACDU	42		42		42		42		42	
		TAR	4		4		4		4		4	
		SELRES	5		5		5		5		5	
		TOTAL:	51		51		51		51		51	

CIN, COURSE TITLE: D-2D-1105, P-3C Pilot Instructor Under Training (IUT)
COURSE LENGTH: 18.8 Weeks **NAVY TOUR LENGTH:** 36 Months
ATTRITION FACTOR: Navy: 0% **BACKOUT FACTOR:** 0.38

TRAINING		ACDU/TAR	CFY03		FY04		FY05		FY06		FY07	
ACTIVITY	SOURCE	SELRES	OFF	ENL	OFF	ENL	OFF	ENL	OFF	ENL	OFF	ENL
VP-30 Fleet Replacement Squadron, NAS Jacksonville												
	USN	ACDU	19		19		19		19		19	
		TOTAL:	19		19		19		19		19	

CIN, COURSE TITLE: D-2D-1107, P-3C NFO (TACCO) Category 4 (Post Command)
COURSE LENGTH: 2.0 Weeks **NAVY TOUR LENGTH:** 36 Months
ATTRITION FACTOR: Navy: 0% **BACKOUT FACTOR:** 0.00

TRAINING		ACDU/TAR	CFY03		FY04		FY05		FY06		FY07	
ACTIVITY	SOURCE	SELRES	OFF	ENL	OFF	ENL	OFF	ENL	OFF	ENL	OFF	ENL
VP-30 Fleet Replacement Squadron, NAS Jacksonville												
	USN	ACDU	20		20		20		20		20	
		TAR	2		2		2		2		2	
		SELRES	2		2		2		2		2	
		TOTAL:	24		24		24		24		24	

II.B. ANNUAL TRAINING INPUT REQUIREMENTS

CIN, COURSE TITLE: D-2D-1111, P-3C Fleet Replacement NFO Category 1 Pipeline
COURSE LENGTH: 24.4 Weeks **NAVY TOUR LENGTH:** 36 Months
ATTRITION FACTOR: Navy: 0% **BACKOUT FACTOR:** 0.49

TRAINING		ACDU/TAR	CFY03		FY04		FY05		FY06		FY07	
ACTIVITY	SOURCE	SELRES	OFF	ENL	OFF	ENL	OFF	ENL	OFF	ENL	OFF	ENL
VP-30 Fleet Replacement Squadron, NAS Jacksonville												
	USN	ACDU	32		32		32		32		32	
		TAR	3		3		3		3		3	
		SELRES	3		3		3		3		3	
		TOTAL:	38		38		38		38		38	

CIN, COURSE TITLE: D-2D-1112, P-3C Replacement NFO Category 3 Pipeline
COURSE LENGTH: 21.8 Weeks **NAVY TOUR LENGTH:** 36 Months
ATTRITION FACTOR: Navy: 0% **BACKOUT FACTOR:** 0.44

TRAINING		ACDU/TAR	CFY03		FY04		FY05		FY06		FY07	
ACTIVITY	SOURCE	SELRES	OFF	ENL	OFF	ENL	OFF	ENL	OFF	ENL	OFF	ENL
VP-30 Fleet Replacement Squadron, NAS Jacksonville												
	USN	ACDU	28		28		28		28		28	
		TAR	3		3		3		3		3	
		SELRES	3		3		3		3		3	
		TOTAL:	34		34		34		34		34	

CIN, COURSE TITLE: D-2D-1113, P-3C Replacement Naval Flight Officer Category 4 Pipeline
COURSE LENGTH: 5.2 Weeks **NAVY TOUR LENGTH:** 36 Months
ATTRITION FACTOR: Navy: 0% **BACKOUT FACTOR:** 0.10

TRAINING		ACDU/TAR	CFY03		FY04		FY05		FY06		FY07	
ACTIVITY	SOURCE	SELRES	OFF	ENL	OFF	ENL	OFF	ENL	OFF	ENL	OFF	ENL
VP-30 Fleet Replacement Squadron, NAS Jacksonville												
	USN	ACDU	17		17		17		17		17	
		TAR	2		2		2		2		2	
		SELRES	2		2		2		2		2	
		TOTAL:	21		21		21		21		21	

CIN, COURSE TITLE: D-050-1003, P-3 Flight Engineer Instructor Under Training (IUT)
COURSE LENGTH: 13.2 Weeks **NAVY TOUR LENGTH:** 36 Months
ATTRITION FACTOR: Navy: 10% **BACKOUT FACTOR:** 0.26

TRAINING		ACDU/TAR	CFY03		FY04		FY05		FY06		FY07	
ACTIVITY	SOURCE	SELRES	OFF	ENL	OFF	ENL	OFF	ENL	OFF	ENL	OFF	ENL
VP-30 Fleet Replacement Squadron, NAS Jacksonville												
	USN	ACDU		1		1		1		1		1
		TOTAL:		1		1		1		1		1

II.B. ANNUAL TRAINING INPUT REQUIREMENTS

CIN, COURSE TITLE: D-050-1008, P-3C Replacement Flight Engineer Category 3 Pipeline
COURSE LENGTH: 11.4 Weeks **NAVY TOUR LENGTH:** 36 Months
ATTRITION FACTOR: Navy: 10% **BACKOUT FACTOR:** 0.23

TRAINING		ACDU/TAR	CFY03		FY04		FY05		FY06		FY07	
ACTIVITY	SOURCE	SELRES	OFF	ENL	OFF	ENL	OFF	ENL	OFF	ENL	OFF	ENL
VP-30 Fleet Replacement Squadron, NAS Jacksonville												
	USN	ACDU	41		41		41		41		41	
		TAR	6		6		6		6		6	
		SELRES	2		2		2		2		2	
		TOTAL:	49		49		49		49		49	

CIN, COURSE TITLE: D-050-1010, P-3 Replacement Flight Engineer Category 1 Pipeline
COURSE LENGTH: 33.4 Weeks **NAVY TOUR LENGTH:** 36 Months
ATTRITION FACTOR: Navy: 10% **BACKOUT FACTOR:** 0.67

TRAINING		ACDU/TAR	CFY03		FY04		FY05		FY06		FY07	
ACTIVITY	SOURCE	SELRES	OFF	ENL	OFF	ENL	OFF	ENL	OFF	ENL	OFF	ENL
VP-30 Fleet Replacement Squadron, NAS Jacksonville												
	USN	ACDU	71		71		71		71		71	
		TAR	14		14		14		14		14	
		SELRES	4		4		4		4		4	
		TOTAL:	89		89		89		89		89	

CIN, COURSE TITLE: D-050-1130, P-3C Update III In-Flight Technician Category I
COURSE LENGTH: 26.2 Weeks **NAVY TOUR LENGTH:** 36 Months
ATTRITION FACTOR: Navy: 10% **BACKOUT FACTOR:** 0.52

TRAINING		ACDU/TAR	CFY03		FY04		FY05		FY06		FY07	
ACTIVITY	SOURCE	SELRES	OFF	ENL	OFF	ENL	OFF	ENL	OFF	ENL	OFF	ENL
VP-30 Fleet Replacement Squadron, NAS Jacksonville												
	USN	ACDU	32		32		32		32		32	
		TAR	10		10		10		10		10	
		SELRES	2		2		2		2		2	
		TOTAL:	44		44		44		44		44	

CIN, COURSE TITLE: D-050-1132, P-3C Fleet Replacement Non-Acoustic Operator Category 1 Pipeline
COURSE LENGTH: 28.6 Weeks **NAVY TOUR LENGTH:** 36 Months
ATTRITION FACTOR: Navy: 10% **BACKOUT FACTOR:** 0.57

TRAINING		ACDU/TAR	CFY03		FY04		FY05		FY06		FY07	
ACTIVITY	SOURCE	SELRES	OFF	ENL	OFF	ENL	OFF	ENL	OFF	ENL	OFF	ENL
VP-30 Fleet Replacement Squadron, NAS Jacksonville												
	USN	ACDU	58		58		58		58		58	
		TAR	5		5		5		5		5	
		SELRES	5		5		5		5		5	
		TOTAL:	68		68		68		68		68	

II.B. ANNUAL TRAINING INPUT REQUIREMENTS

CIN, COURSE TITLE: D-050-1133, P-3 Non-Acoustic Operator Instructor Under Training (IUT)
COURSE LENGTH: 9.8 Weeks **NAVY TOUR LENGTH:** 36 Months
ATTRITION FACTOR: Navy: 10% **BACKOUT FACTOR:** 0.20

TRAINING		ACDU/TAR	CFY03		FY04		FY05		FY06		FY07	
ACTIVITY	SOURCE	SELRES	OFF	ENL	OFF	ENL	OFF	ENL	OFF	ENL	OFF	ENL
VP-30 Fleet Replacement Squadron, NAS Jacksonville												
	USN	ACDU		13		13		13		13		13
		TOTAL:		13		13		13		13		13

CIN, COURSE TITLE: D-050-1134, P-3C AIP In-Flight Technician Instructor Under Training (IUT)
COURSE LENGTH: 5.6 Weeks **NAVY TOUR LENGTH:** 36 Months
ATTRITION FACTOR: Navy: 10% **BACKOUT FACTOR:** 0.11

TRAINING		ACDU/TAR	CFY03		FY04		FY05		FY06		FY07	
ACTIVITY	SOURCE	SELRES	OFF	ENL	OFF	ENL	OFF	ENL	OFF	ENL	OFF	ENL
VP-30 Fleet Replacement Squadron, NAS Jacksonville												
	USN	ACDU		1		1		1		1		1
		TOTAL:		1		1		1		1		1

CIN, COURSE TITLE: D-050-1136, P-3C Update III Non-Acoustic Operator Category 3 Pipeline
COURSE LENGTH: 8.8 Weeks **NAVY TOUR LENGTH:** 36 Months
ATTRITION FACTOR: Navy: 10% **BACKOUT FACTOR:** 0.18

TRAINING		ACDU/TAR	CFY03		FY04		FY05		FY06		FY07	
ACTIVITY	SOURCE	SELRES	OFF	ENL	OFF	ENL	OFF	ENL	OFF	ENL	OFF	ENL
VP-30 Fleet Replacement Squadron, NAS Jacksonville												
	USN	ACDU		33		33		33		33		33
		TAR		3		3		3		3		3
		SELRES		2		2		2		2		2
		TOTAL:		38		38		38		38		38

CIN, COURSE TITLE: D-050-1140, P-3C Update III Acoustic Sensor Operator Category 3 Pipeline
COURSE LENGTH: 7.2 Weeks **NAVY TOUR LENGTH:** 36 Months
ATTRITION FACTOR: Navy: 10% **BACKOUT FACTOR:** 0.14

TRAINING		ACDU/TAR	CFY03		FY04		FY05		FY06		FY07	
ACTIVITY	SOURCE	SELRES	OFF	ENL	OFF	ENL	OFF	ENL	OFF	ENL	OFF	ENL
VP-30 Fleet Replacement Squadron, NAS Jacksonville												
	USN	ACDU		71		71		71		71		71
		TAR		3		3		3		3		3
		SELRES		3		3		3		3		3
		TOTAL:		77		77		77		77		77

II.B. ANNUAL TRAINING INPUT REQUIREMENTS

CIN, COURSE TITLE: D-050-1150, P-3C Update III In-Flight Technician Category 3 Pipeline (Refresher)
COURSE LENGTH: 9.2 Weeks **NAVY TOUR LENGTH:** 36 Months
ATTRITION FACTOR: Navy: 10% **BACKOUT FACTOR:** 0.18

TRAINING		ACDU/TAR	CFY03		FY04		FY05		FY06		FY07	
ACTIVITY	SOURCE	SELRES	OFF	ENL	OFF	ENL	OFF	ENL	OFF	ENL	OFF	ENL
VP-30 Fleet Replacement Squadron, NAS Jacksonville												
	USN	ACDU	30		30		30		30		30	
		TAR	7		7		7		7		7	
		SELRES	2		2		2		2		2	
		TOTAL:	39		39		39		39		39	

CIN, COURSE TITLE: D-050-1161, P-3C APS 115 Weather Avoidance and Radar Safety of Flight Operator
COURSE LENGTH: 3.6 Weeks **NAVY TOUR LENGTH:** 36 Months
ATTRITION FACTOR: Navy: 10% **BACKOUT FACTOR:** 0.07

TRAINING		ACDU/TAR	CFY03		FY04		FY05		FY06		FY07	
ACTIVITY	SOURCE	SELRES	OFF	ENL	OFF	ENL	OFF	ENL	OFF	ENL	OFF	ENL
VP-30 Fleet Replacement Squadron, NAS Jacksonville												
	USN	ACDU	22		22		22		22		22	
		TAR	3		3		3		3		3	
		SELRES	2		2		2		2		2	
		TOTAL:	27		27		27		27		27	

CIN, COURSE TITLE: D-050-1230, P-3C Update III Acoustic Operator Category 1 Pipeline
COURSE LENGTH: 24.8 Weeks **NAVY TOUR LENGTH:** 36 Months
ATTRITION FACTOR: Navy: 10% **BACKOUT FACTOR:** 0.50

TRAINING		ACDU/TAR	CFY03		FY04		FY05		FY06		FY07	
ACTIVITY	SOURCE	SELRES	OFF	ENL	OFF	ENL	OFF	ENL	OFF	ENL	OFF	ENL
VP-30 Fleet Replacement Squadron, NAS Jacksonville												
	USN	ACDU	90		90		90		90		90	
		TAR	2		2		2		2		2	
		SELRES	4		4		4		4		4	
		TOTAL:	96		96		96		96		96	

CIN, COURSE TITLE: D-210-1138, P-3C Update III Acoustic Operator Instructor Under Training (IUT)
COURSE LENGTH: 9.8 Weeks **NAVY TOUR LENGTH:** 36 Months
ATTRITION FACTOR: Navy: 10% **BACKOUT FACTOR:** 0.20

TRAINING		ACDU/TAR	CFY03		FY04		FY05		FY06		FY07	
ACTIVITY	SOURCE	SELRES	OFF	ENL	OFF	ENL	OFF	ENL	OFF	ENL	OFF	ENL
VP-30 Fleet Replacement Squadron, NAS Jacksonville												
	USN	ACDU	18		18		18		18		18	
		TOTAL:	18		18		18		18		18	

II.B. ANNUAL TRAINING INPUT REQUIREMENTS

CIN, COURSE TITLE: D-102-1029, P-3C Weapon Systems Initial Organizational Maintenance
COURSE LENGTH: 17.8 Weeks **NAVY TOUR LENGTH:** 36 Months
ATTRITION FACTOR: Navy: 10% **BACKOUT FACTOR:** 0.36

TRAINING		ACDU/TAR	CFY03		FY04		FY05		FY06		FY07	
ACTIVITY	SOURCE	SELRES	OFF	ENL	OFF	ENL	OFF	ENL	OFF	ENL	OFF	ENL
MTU 1011, NAMTRAU Jacksonville												
	USN	ACDU		54		54		54		54		54
		TAR		6		6		6		6		6
		SELRES		2		2		2		2		2
		TOTAL:		62		62		62		62		62

CIN, COURSE TITLE: E-102-1029, P-3C Weapon Systems Initial Organizational Maintenance
COURSE LENGTH: 17.8 Weeks **NAVY TOUR LENGTH:** 36 Months
ATTRITION FACTOR: Navy: 10% **BACKOUT FACTOR:** 0.36

TRAINING		ACDU/TAR	CFY03		FY04		FY05		FY06		FY07	
ACTIVITY	SOURCE	SELRES	OFF	ENL	OFF	ENL	OFF	ENL	OFF	ENL	OFF	ENL
MTU 1012, NAMTRAU Whidbey Island												
	USN	ACDU		42		42		42		42		42
		TAR		4		4		4		4		4
		SELRES		2		2		2		2		2
		TOTAL:		48		48		48		48		48

CIN, COURSE TITLE: D-102-1132, P-3C Weapon Systems Career Organizational Maintenance
COURSE LENGTH: 5.8 Weeks **NAVY TOUR LENGTH:** 36 Months
ATTRITION FACTOR: Navy: 10% **BACKOUT FACTOR:** 0.12

TRAINING		ACDU/TAR	CFY03		FY04		FY05		FY06		FY07	
ACTIVITY	SOURCE	SELRES	OFF	ENL	OFF	ENL	OFF	ENL	OFF	ENL	OFF	ENL
MTU 1011, NAMTRAU Jacksonville												
	USN	ACDU		20		20		20		20		20
		TAR		5		5		5		5		5
		SELRES		0		1		0		0		1
		TOTAL:		25		26		25		25		26

CIN, COURSE TITLE: E-102-1132, P-3C Weapon Systems Career Organizational Maintenance
COURSE LENGTH: 5.8 Weeks **NAVY TOUR LENGTH:** 36 Months
ATTRITION FACTOR: Navy: 10% **BACKOUT FACTOR:** 0.12

TRAINING		ACDU/TAR	CFY03		FY04		FY05		FY06		FY07	
ACTIVITY	SOURCE	SELRES	OFF	ENL	OFF	ENL	OFF	ENL	OFF	ENL	OFF	ENL
MTU 1012, NAMTRAU Whidbey Island												
	USN	ACDU		25		25		25		25		25
		TAR		4		4		4		4		4
		SELRES		0		0		0		1		0
		TOTAL:		29		29		29		30		29

II.B. ANNUAL TRAINING INPUT REQUIREMENTS

CIN, COURSE TITLE: D-601-1011, P-3 Power Plants and Related Systems Initial Organizational Maintenance
COURSE LENGTH: 5.0 Weeks **NAVY TOUR LENGTH:** 36 Months
ATTRITION FACTOR: Navy: 10% **BACKOUT FACTOR:** 0.10

TRAINING		ACDU/TAR	CFY03		FY04		FY05		FY06		FY07	
ACTIVITY	SOURCE	SELRES	OFF	ENL	OFF	ENL	OFF	ENL	OFF	ENL	OFF	ENL
MTU 1011, NAMTRAU Jacksonville												
	USN	ACDU		68		68		68		68		68
		TAR		6		6		6		6		6
		SELRES		2		2		2		2		2
		TOTAL:		76		76		76		76		76

CIN, COURSE TITLE: E-601-1011, P-3 Power Plants and Related Systems Initial Organizational Maintenance
COURSE LENGTH: 5.0 Weeks **NAVY TOUR LENGTH:** 36 Months
ATTRITION FACTOR: Navy: 10% **BACKOUT FACTOR:** 0.10

TRAINING		ACDU/TAR	CFY03		FY04		FY05		FY06		FY07	
ACTIVITY	SOURCE	SELRES	OFF	ENL	OFF	ENL	OFF	ENL	OFF	ENL	OFF	ENL
MTU 1012, NAMTRAU Whidbey Island												
	USN	ACDU		46		46		46		46		46
		TAR		4		4		4		4		4
		SELRES		2		2		2		2		2
		TOTAL:		52		52		52		52		52

CIN, COURSE TITLE: D-601-1110, P-3 Power Plants and Related Systems Career Organizational Maintenance
COURSE LENGTH: 2.4 Weeks **NAVY TOUR LENGTH:** 36 Months
ATTRITION FACTOR: Navy: 10% **BACKOUT FACTOR:** 0.05

TRAINING		ACDU/TAR	CFY03		FY04		FY05		FY06		FY07	
ACTIVITY	SOURCE	SELRES	OFF	ENL	OFF	ENL	OFF	ENL	OFF	ENL	OFF	ENL
MTU 1011, NAMTRAU Jacksonville												
	USN	ACDU		21		21		21		21		21
		TAR		5		5		5		5		5
		SELRES		0		0		0		1		0
		TOTAL:		26		26		26		27		26

CIN, COURSE TITLE: E-601-1110, P-3 Power Plants and Related Systems Career Organizational Maintenance
COURSE LENGTH: 2.4 Weeks **NAVY TOUR LENGTH:** 36 Months
ATTRITION FACTOR: Navy: 10% **BACKOUT FACTOR:** 0.05

TRAINING		ACDU/TAR	CFY03		FY04		FY05		FY06		FY07	
ACTIVITY	SOURCE	SELRES	OFF	ENL	OFF	ENL	OFF	ENL	OFF	ENL	OFF	ENL
MTU 1012, NAMTRAU Whidbey Island												
	USN	ACDU		20		20		20		20		20
		TAR		4		4		4		4		4
		SELRES		1		0		0		0		0
		TOTAL:		25		24		24		24		24

II.B. ANNUAL TRAINING INPUT REQUIREMENTS

CIN, COURSE TITLE: D-602-1054, P-3C Electrical and Instrument Systems Initial Organizational Maintenance
COURSE LENGTH: 7.0 Weeks **NAVY TOUR LENGTH:** 36 Months
ATTRITION FACTOR: Navy: 10% **BACKOUT FACTOR:** 0.14

TRAINING		ACDU/TAR	CFY03		FY04		FY05		FY06		FY07	
ACTIVITY	SOURCE	SELRES	OFF	ENL	OFF	ENL	OFF	ENL	OFF	ENL	OFF	ENL
MTU 1011, NAMTRAU Jacksonville												
	USN	ACDU		29		29		29		29		29
		TAR		3		3		3		3		3
		SELRES		1		1		1		1		1
		TOTAL:		33		33		33		33		33

CIN, COURSE TITLE: E-602-1054, P-3C Electrical and Instrument Systems Initial Organizational Maintenance
COURSE LENGTH: 7.0 Weeks **NAVY TOUR LENGTH:** 36 Months
ATTRITION FACTOR: Navy: 10% **BACKOUT FACTOR:** 0.14

TRAINING		ACDU/TAR	CFY03		FY04		FY05		FY06		FY07	
ACTIVITY	SOURCE	SELRES	OFF	ENL	OFF	ENL	OFF	ENL	OFF	ENL	OFF	ENL
MTU 1012, NAMTRAU Whidbey Island												
	USN	ACDU		30		30		30		30		30
		TAR		2		2		2		2		2
		SELRES		1		1		1		1		1
		TOTAL:		33		33		33		33		33

CIN, COURSE TITLE: D-602-1080, P-3 Structures and Hydraulic Power and Flight Controls (Career) Organizational Maintenance
COURSE LENGTH: 3.6 Weeks **NAVY TOUR LENGTH:** 36 Months
ATTRITION FACTOR: Navy: 10% **BACKOUT FACTOR:** 0.07

TRAINING		ACDU/TAR	CFY03		FY04		FY05		FY06		FY07	
ACTIVITY	SOURCE	SELRES	OFF	ENL	OFF	ENL	OFF	ENL	OFF	ENL	OFF	ENL
MTU 1011, NAMTRAU Jacksonville												
	USN	ACDU		26		26		26		26		26
		TAR		6		6		6		6		6
		SELRES		1		1		1		1		1
		TOTAL:		33		33		33		33		33

CIN, COURSE TITLE: E-602-1080, P-3 Structures and Hydraulic Power and Flight Controls (Career) Organizational Maintenance
COURSE LENGTH: 3.6 Weeks **NAVY TOUR LENGTH:** 36 Months
ATTRITION FACTOR: Navy: 10% **BACKOUT FACTOR:** 0.07

TRAINING		ACDU/TAR	CFY03		FY04		FY05		FY06		FY07	
ACTIVITY	SOURCE	SELRES	OFF	ENL	OFF	ENL	OFF	ENL	OFF	ENL	OFF	ENL
MTU 1012, NAMTRAU Whidbey Island												
	USN	ACDU		22		22		22		22		22
		TAR		5		5		5		5		5
		SELRES		1		1		1		1		1
		TOTAL:		28		28		28		28		28

II.B. ANNUAL TRAINING INPUT REQUIREMENTS

CIN, COURSE TITLE: D-602-1081, P-3 Airframe and Hydraulic Systems Initial Organizational Maintenance
COURSE LENGTH: 2.2 Weeks **NAVY TOUR LENGTH:** 36 Months
ATTRITION FACTOR: Navy: 10% **BACKOUT FACTOR:** 0.04

TRAINING		ACDU/TAR	CFY03		FY04		FY05		FY06		FY07	
ACTIVITY	SOURCE	SELRES	OFF	ENL	OFF	ENL	OFF	ENL	OFF	ENL	OFF	ENL
MTU 1011, NAMTRAU Jacksonville												
	USN	ACDU		55		55		55		55		55
		TAR		12		12		12		12		12
		SELRES		2		2		2		2		2
		TOTAL:		69		69		69		69		69

CIN, COURSE TITLE: E-602-1081, P-3 Airframe and Hydraulic Systems Initial Organizational Maintenance
COURSE LENGTH: 2.2 Weeks **NAVY TOUR LENGTH:** 36 Months
ATTRITION FACTOR: Navy: 10% **BACKOUT FACTOR:** 0.04

TRAINING		ACDU/TAR	CFY03		FY04		FY05		FY06		FY07	
ACTIVITY	SOURCE	SELRES	OFF	ENL	OFF	ENL	OFF	ENL	OFF	ENL	OFF	ENL
MTU 1012, NAMTRAU Whidbey Island												
	USN	ACDU		53		53		53		53		53
		TAR		7		7		7		7		7
		SELRES		2		2		2		2		2
		TOTAL:		62		62		62		62		62

CIN, COURSE TITLE: D-602-1151, P-3C Electrical and Instrument Systems Career Organizational Maintenance
COURSE LENGTH: 3.4 Weeks **NAVY TOUR LENGTH:** 36 Months
ATTRITION FACTOR: Navy: 10% **BACKOUT FACTOR:** 0.07

TRAINING		ACDU/TAR	CFY03		FY04		FY05		FY06		FY07	
ACTIVITY	SOURCE	SELRES	OFF	ENL	OFF	ENL	OFF	ENL	OFF	ENL	OFF	ENL
MTU 1011, NAMTRAU Jacksonville												
	USN	ACDU		21		21		21		21		21
		TAR		4		4		4		4		4
		TOTAL:		25		25		25		25		25

CIN, COURSE TITLE: E-602-1151, P-3C Electrical and Instrument Systems Career Organizational Maintenance
COURSE LENGTH: 3.4 Weeks **NAVY TOUR LENGTH:** 36 Months
ATTRITION FACTOR: Navy: 10% **BACKOUT FACTOR:** 0.07

TRAINING		ACDU/TAR	CFY03		FY04		FY05		FY06		FY07	
ACTIVITY	SOURCE	SELRES	OFF	ENL	OFF	ENL	OFF	ENL	OFF	ENL	OFF	ENL
MTU 1012, NAMTRAU Whidbey Island												
	USN	ACDU		16		16		16		16		16
		TAR		3		3		3		3		3
		TOTAL:		19		19		19		19		19

II.B. ANNUAL TRAINING INPUT REQUIREMENTS

CIN, COURSE TITLE: D-602-1161, P-3 Environmental Systems Organizational Maintenance
COURSE LENGTH: 3.4 Weeks **NAVY TOUR LENGTH:** 36 Months
ATTRITION FACTOR: Navy: 10% **BACKOUT FACTOR:** 0.07

TRAINING		ACDU/TAR	CFY03		FY04		FY05		FY06		FY07	
ACTIVITY	SOURCE	SELRES	OFF	ENL	OFF	ENL	OFF	ENL	OFF	ENL	OFF	ENL
MTU 1011, NAMTRAU Jacksonville												
	USN	ACDU		17		17		17		17		17
		TAR		2		2		2		2		2
		SELRES		1		1		1		1		1
		TOTAL:		20		20		20		20		20

CIN, COURSE TITLE: E-602-1161, P-3 Environmental Systems Organizational Maintenance
COURSE LENGTH: 3.4 Weeks **NAVY TOUR LENGTH:** 36 Months
ATTRITION FACTOR: Navy: 10% **BACKOUT FACTOR:** 0.07

TRAINING		ACDU/TAR	CFY03		FY04		FY05		FY06		FY07	
ACTIVITY	SOURCE	SELRES	OFF	ENL	OFF	ENL	OFF	ENL	OFF	ENL	OFF	ENL
MTU 1012, NAMTRAU Whidbey Island												
	USN	ACDU		15		15		15		15		15
		TAR		2		2		2		2		2
		SELRES		1		1		1		1		1
		TOTAL:		18		18		18		18		18

CIN, COURSE TITLE: D-646-1140, P-3 Armament Systems Integrated Organizational Maintenance
COURSE LENGTH: 6.2 Weeks **NAVY TOUR LENGTH:** 36 Months
ATTRITION FACTOR: Navy: 10% **BACKOUT FACTOR:** 0.12

TRAINING		ACDU/TAR	CFY03		FY04		FY05		FY06		FY07	
ACTIVITY	SOURCE	SELRES	OFF	ENL	OFF	ENL	OFF	ENL	OFF	ENL	OFF	ENL
MTU 1011, NAMTRAU Jacksonville												
	USN	ACDU		12		12		12		12		12
		TAR		2		2		2		2		2
		SELRES		0		0		0		1		0
		TOTAL:		14		14		14		15		14

CIN, COURSE TITLE: E-646-1140, P-3 Armament Systems Integrated Organizational Maintenance
COURSE LENGTH: 6.2 Weeks **NAVY TOUR LENGTH:** 36 Months
ATTRITION FACTOR: Navy: 10% **BACKOUT FACTOR:** 0.12

TRAINING		ACDU/TAR	CFY03		FY04		FY05		FY06		FY07	
ACTIVITY	SOURCE	SELRES	OFF	ENL	OFF	ENL	OFF	ENL	OFF	ENL	OFF	ENL
MTU 1012, NAMTRAU Whidbey Island												
	USN	ACDU		13		13		13		13		13
		TAR		1		1		1		1		1
		SELRES		0		1		0		1		0
		TOTAL:		14		15		14		15		14

II.B. ANNUAL TRAINING INPUT REQUIREMENTS

CIN, COURSE TITLE: D-646-1144, P-3 Conventional Weapons Loading Refresher
COURSE LENGTH: 1.0 Weeks **NAVY TOUR LENGTH:** 36 Months
ATTRITION FACTOR: Navy: 10% **BACKOUT FACTOR:** 0.00

TRAINING		ACDU/TAR	CFY03		FY04		FY05		FY06		FY07	
ACTIVITY	SOURCE	SELRES	OFF	ENL	OFF	ENL	OFF	ENL	OFF	ENL	OFF	ENL
FASOTRAGRU DET, NAS Brunswick												
	USN	ACDU		76		76		76		76		76
		TAR		3		3		3		3		3
		SELRES		4		4		4		4		4
FASOTRAGRU DET, NAS Jacksonville												
	USN	ACDU		74		74		74		74		74
		TAR		3		3		3		3		3
		SELRES		4		4		4		4		4
		TOTAL:		164		164		164		164		164

CIN, COURSE TITLE: A-100-0072, Miniature Electronics Repair
COURSE LENGTH: 4.0 Weeks **NAVY TOUR LENGTH:** 36 Months
ATTRITION FACTOR: Navy: 10% **BACKOUT FACTOR:** 0.08

TRAINING		ACDU/TAR	CFY03		FY04		FY05		FY06		FY07	
ACTIVITY	SOURCE	SELRES	OFF	ENL	OFF	ENL	OFF	ENL	OFF	ENL	OFF	ENL
Fleet Training Center Mayport, NS Mayport												
	USN	ACDU		7		7		7		7		7
FASOTRAGRUDET, NAS Whidbey Island												
	USN	ACDU		1		1		1		1		1
		TOTAL:		8		8		8		8		8

CIN, COURSE TITLE: D-102-6036, Doppler Radar Equipment Intermediate Maintenance
COURSE LENGTH: 5.0 Weeks **NAVY TOUR LENGTH:** 36 Months
ATTRITION FACTOR: Navy: 10% **BACKOUT FACTOR:** 0.10

TRAINING		ACDU/TAR	CFY03		FY04		FY05		FY06		FY07	
ACTIVITY	SOURCE	SELRES	OFF	ENL	OFF	ENL	OFF	ENL	OFF	ENL	OFF	ENL
MTU 1011, NAMTRAU Jacksonville												
	USN	ACDU		1		1		1		1		1
		SELRES		0		0		1		0		0
		TOTAL:		1		1		2		1		1

II.B. ANNUAL TRAINING INPUT REQUIREMENTS

CIN, COURSE TITLE: D-102-6039, Electronics Identification Equipment Intermediate Maintenance
COURSE LENGTH: 9.4 Weeks **NAVY TOUR LENGTH:** 36 Months
ATTRITION FACTOR: Navy: 10% **BACKOUT FACTOR:** 0.19

TRAINING		ACDU/TAR	CFY03		FY04		FY05		FY06		FY07	
ACTIVITY	SOURCE	SELRES	OFF	ENL	OFF	ENL	OFF	ENL	OFF	ENL	OFF	ENL
MTU 1007, NAMTRAU Oceana												
	USN	ACDU		3		3		3		3		3
MTU 1011, NAMTRAU Jacksonville												
	USN	ACDU		7		7		7		7		7
		TOTAL:		10		10		10		10		10

CIN, COURSE TITLE: E-102-6039, Electronics Identification Equipment Intermediate Maintenance
COURSE LENGTH: 9.4 Weeks **NAVY TOUR LENGTH:** 36 Months
ATTRITION FACTOR: Navy: 10% **BACKOUT FACTOR:** 0.19

TRAINING		ACDU/TAR	CFY03		FY04		FY05		FY06		FY07	
ACTIVITY	SOURCE	SELRES	OFF	ENL	OFF	ENL	OFF	ENL	OFF	ENL	OFF	ENL
MTU 1038, NAMTRAU Lemoore												
	USN	ACDU		2		2		2		2		2
		TOTAL:		2		2		2		2		2

CIN, COURSE TITLE: D-102-6097, AN/APS-115B Radar Systems Intermediate Maintenance
COURSE LENGTH: 6.4 Weeks **NAVY TOUR LENGTH:** 36 Months
ATTRITION FACTOR: Navy: 10% **BACKOUT FACTOR:** 0.13

TRAINING		ACDU/TAR	CFY03		FY04		FY05		FY06		FY07	
ACTIVITY	SOURCE	SELRES	OFF	ENL	OFF	ENL	OFF	ENL	OFF	ENL	OFF	ENL
MTU 1011, NAMTRAU Jacksonville												
	USN	ACDU		6		6		6		6		6
		TOTAL:		6		6		6		6		6

CIN, COURSE TITLE: E-102-6097, AN/APS-115B Radar Systems Intermediate Maintenance
COURSE LENGTH: 6.4 Weeks **NAVY TOUR LENGTH:** 36 Months
ATTRITION FACTOR: Navy: 10% **BACKOUT FACTOR:** 0.13

TRAINING		ACDU/TAR	CFY03		FY04		FY05		FY06		FY07	
ACTIVITY	SOURCE	SELRES	OFF	ENL	OFF	ENL	OFF	ENL	OFF	ENL	OFF	ENL
MTU 1012, NAMTRAU Whidbey Island												
	USN	ACDU		3		3		3		3		3
		SELRES		1		0		0		0		0
		TOTAL:		4		3		3		3		3

II.B. ANNUAL TRAINING INPUT REQUIREMENTS

CIN, COURSE TITLE: D-102-6109, Radar Altimeter Equipment Intermediate Maintenance
COURSE LENGTH: 4.4 Weeks **NAVY TOUR LENGTH:** 36 Months
ATTRITION FACTOR: Navy: 10% **BACKOUT FACTOR:** 0.09

TRAINING ACTIVITY	SOURCE	ACDU/TAR SELRES	CFY03 OFF	CFY03 ENL	FY04 OFF	FY04 ENL	FY05 OFF	FY05 ENL	FY06 OFF	FY06 ENL	FY07 OFF	FY07 ENL
MTU 1011, NAMTRAU Jacksonville												
	USN	ACDU		3		3		3		3		3
		TOTAL:		3		3		3		3		3

CIN, COURSE TITLE: E-102-6109, Radar Altimeter Equipment Intermediate Maintenance
COURSE LENGTH: 4.4 Weeks **NAVY TOUR LENGTH:** 36 Months
ATTRITION FACTOR: Navy: 10% **BACKOUT FACTOR:** 0.09

TRAINING ACTIVITY	SOURCE	ACDU/TAR SELRES	CFY03 OFF	CFY03 ENL	FY04 OFF	FY04 ENL	FY05 OFF	FY05 ENL	FY06 OFF	FY06 ENL	FY07 OFF	FY07 ENL
MTU 1036, NAMTRAU North Island												
	USN	ACDU		4		4		4		4		4
		SELRES		1		1		1		1		1
		TOTAL:		5		5		5		5		5

CIN, COURSE TITLE: D-102-6113, TACAN Radio Navigation Equipment Intermediate Maintenance
COURSE LENGTH: 5.4 Weeks **NAVY TOUR LENGTH:** 36 Months
ATTRITION FACTOR: Navy: 10% **BACKOUT FACTOR:** 0.11

TRAINING ACTIVITY	SOURCE	ACDU/TAR SELRES	CFY03 OFF	CFY03 ENL	FY04 OFF	FY04 ENL	FY05 OFF	FY05 ENL	FY06 OFF	FY06 ENL	FY07 OFF	FY07 ENL
MTU 1007, NAMTRAU Oceana												
	USN	ACDU		4		4		4		4		4
		SELRES		0		0		0		0		1
		TOTAL:		4		4		4		4		5

CIN, COURSE TITLE: E-102-6113, TACAN Radio Navigation Equipment Intermediate Maintenance
COURSE LENGTH: 5.4 Weeks **NAVY TOUR LENGTH:** 36 Months
ATTRITION FACTOR: Navy: 10% **BACKOUT FACTOR:** 0.11

TRAINING ACTIVITY	SOURCE	ACDU/TAR SELRES	CFY03 OFF	CFY03 ENL	FY04 OFF	FY04 ENL	FY05 OFF	FY05 ENL	FY06 OFF	FY06 ENL	FY07 OFF	FY07 ENL
MTU 1038, NAMTRAU Lemoore												
	USN	ACDU		8		8		8		8		8
		SELRES		1		1		1		1		1
		TOTAL:		9		9		9		9		9

II.B. ANNUAL TRAINING INPUT REQUIREMENTS

CIN, COURSE TITLE: D-102-6121, Infrared Detection System Intermediate Maintenance
COURSE LENGTH: 13.4 Weeks **NAVY TOUR LENGTH:** 36 Months
ATTRITION FACTOR: Navy: 10% **BACKOUT FACTOR:** 0.27

TRAINING		ACDU/TAR	CFY03		FY04		FY05		FY06		FY07	
ACTIVITY	SOURCE	SELRES	OFF	ENL	OFF	ENL	OFF	ENL	OFF	ENL	OFF	ENL
MTU 1011, NAMTRAU Jacksonville												
	USN	ACDU		3		3		3		3		3
		SELRES		0		0		0		0		1
		TOTAL:		3		3		3		3		4

CIN, COURSE TITLE: E-102-6121, Infrared Detection System Intermediate Maintenance
COURSE LENGTH: 13.4 Weeks **NAVY TOUR LENGTH:** 36 Months
ATTRITION FACTOR: Navy: 10% **BACKOUT FACTOR:** 0.27

TRAINING		ACDU/TAR	CFY03		FY04		FY05		FY06		FY07	
ACTIVITY	SOURCE	SELRES	OFF	ENL	OFF	ENL	OFF	ENL	OFF	ENL	OFF	ENL
MTU 1012, NAMTRAU Whidbey Island												
	USN	ACDU		3		3		3		3		3
		SELRES		0		0		0		0		0
		TOTAL:		3		3		3		3		3

CIN, COURSE TITLE: D-102-6122, Cryptographic Equipment Intermediate Maintenance
COURSE LENGTH: 3.2 Weeks **NAVY TOUR LENGTH:** 36 Months
ATTRITION FACTOR: Navy: 10% **BACKOUT FACTOR:** 0.06

TRAINING		ACDU/TAR	CFY03		FY04		FY05		FY06		FY07	
ACTIVITY	SOURCE	SELRES	OFF	ENL	OFF	ENL	OFF	ENL	OFF	ENL	OFF	ENL
MTU 1007, NAMTRAU Oceana												
	USN	ACDU		4		4		4		4		4
		TOTAL:		4		4		4		4		4

CIN, COURSE TITLE: E-102-6122, Cryptographic Equipment Intermediate Maintenance
COURSE LENGTH: 3.2 Weeks **NAVY TOUR LENGTH:** 36 Months
ATTRITION FACTOR: Navy: 10% **BACKOUT FACTOR:** 0.06

TRAINING		ACDU/TAR	CFY03		FY04		FY05		FY06		FY07	
ACTIVITY	SOURCE	SELRES	OFF	ENL	OFF	ENL	OFF	ENL	OFF	ENL	OFF	ENL
MTU 1038, NAMTRAU Lemoore												
	USN	ACDU		1		1		1		1		1
		TOTAL:		1		1		1		1		1

II.B. ANNUAL TRAINING INPUT REQUIREMENTS

CIN, COURSE TITLE: D-102-6152, UHF Communications Equipment Intermediate Maintenance
COURSE LENGTH: 4.4 Weeks **NAVY TOUR LENGTH:** 36 Months
ATTRITION FACTOR: Navy: 10% **BACKOUT FACTOR:** 0.09

TRAINING		ACDU/TAR	CFY03		FY04		FY05		FY06		FY07	
ACTIVITY	SOURCE	SELRES	OFF	ENL	OFF	ENL	OFF	ENL	OFF	ENL	OFF	ENL
MTU 1007, NAMTRAU Oceana												
	USN	ACDU		5		5		5		5		5
		TOTAL:		5		5		5		5		5

CIN, COURSE TITLE: E-102-6152, UHF Communications Equipment Intermediate Maintenance
COURSE LENGTH: 4.4 Weeks **NAVY TOUR LENGTH:** 36 Months
ATTRITION FACTOR: Navy: 10% **BACKOUT FACTOR:** 0.09

TRAINING		ACDU/TAR	CFY03		FY04		FY05		FY06		FY07	
ACTIVITY	SOURCE	SELRES	OFF	ENL	OFF	ENL	OFF	ENL	OFF	ENL	OFF	ENL
MTU 1038, NAMTRAU Lemoore												
	USN	ACDU		5		5		5		5		5
		SELRES		0		0		0		1		0
		TOTAL:		5		5		5		6		5

CIN, COURSE TITLE: D-102-6171, P-3 Peculiar Communications Equipment Intermediate Maintenance
COURSE LENGTH: 7.4 Weeks **NAVY TOUR LENGTH:** 36 Months
ATTRITION FACTOR: Navy: 10% **BACKOUT FACTOR:** 0.15

TRAINING		ACDU/TAR	CFY03		FY04		FY05		FY06		FY07	
ACTIVITY	SOURCE	SELRES	OFF	ENL	OFF	ENL	OFF	ENL	OFF	ENL	OFF	ENL
MTU 1011, NAMTRAU Jacksonville												
	USN	ACDU		14		14		14		14		14
		SELRES		0		0		0		0		1
		TOTAL:		14		14		14		14		15

CIN, COURSE TITLE: E-102-6171, P-3 Peculiar Communications Equipment Intermediate Maintenance
COURSE LENGTH: 7.4 Weeks **NAVY TOUR LENGTH:** 36 Months
ATTRITION FACTOR: Navy: 10% **BACKOUT FACTOR:** 0.15

TRAINING		ACDU/TAR	CFY03		FY04		FY05		FY06		FY07	
ACTIVITY	SOURCE	SELRES	OFF	ENL	OFF	ENL	OFF	ENL	OFF	ENL	OFF	ENL
MTU 1012, NAMTRAU Whidbey Island												
	USN	ACDU		4		4		4		4		4
		SELRES		0		0		0		1		0
		TOTAL:		4		4		4		5		4

II.B. ANNUAL TRAINING INPUT REQUIREMENTS

CIN, COURSE TITLE: D-102-6172, P-3 Peculiar Navigation Equipment Intermediate Maintenance
COURSE LENGTH: 5.6 Weeks **NAVY TOUR LENGTH:** 36 Months
ATTRITION FACTOR: Navy: 10% **BACKOUT FACTOR:** 0.11

TRAINING		ACDU/TAR	CFY03		FY04		FY05		FY06		FY07	
ACTIVITY	SOURCE	SELRES	OFF	ENL	OFF	ENL	OFF	ENL	OFF	ENL	OFF	ENL
MTU 1011, NAMTRAU Jacksonville												
	USN	ACDU		6		6		6		6		6
		TOTAL:		6		6		6		6		6

CIN, COURSE TITLE: E-102-6172, P-3 Peculiar Navigation Equipment Intermediate Maintenance
COURSE LENGTH: 5.6 Weeks **NAVY TOUR LENGTH:** 36 Months
ATTRITION FACTOR: Navy: 10% **BACKOUT FACTOR:** 0.11

TRAINING		ACDU/TAR	CFY03		FY04		FY05		FY06		FY07	
ACTIVITY	SOURCE	SELRES	OFF	ENL	OFF	ENL	OFF	ENL	OFF	ENL	OFF	ENL
MTU 1012, NAMTRAU Whidbey Island												
	USN	ACDU		2		2		2		2		2
		SELRES		0		0		0		1		0
		TOTAL:		2		2		2		3		2

CIN, COURSE TITLE: D-130-9057, P-3 Magnetic Anomaly Detection (MAD) System Intermediate Maintenance
COURSE LENGTH: 5.6 Weeks **NAVY TOUR LENGTH:** 36 Months
ATTRITION FACTOR: Navy: 10% **BACKOUT FACTOR:** 0.11

TRAINING		ACDU/TAR	CFY03		FY04		FY05		FY06		FY07	
ACTIVITY	SOURCE	SELRES	OFF	ENL	OFF	ENL	OFF	ENL	OFF	ENL	OFF	ENL
MTU 1011, NAMTRAU Jacksonville												
	USN	ACDU		3		3		3		3		3
		TOTAL:		3		3		3		3		3

CIN, COURSE TITLE: E-130-9057, P-3 Magnetic Anomaly Detection (MAD) System Intermediate Maintenance
COURSE LENGTH: 5.6 Weeks **NAVY TOUR LENGTH:** 36 Months
ATTRITION FACTOR: Navy: 10% **BACKOUT FACTOR:** 0.11

TRAINING		ACDU/TAR	CFY03		FY04		FY05		FY06		FY07	
ACTIVITY	SOURCE	SELRES	OFF	ENL	OFF	ENL	OFF	ENL	OFF	ENL	OFF	ENL
MTU 1012, NAMTRAU Whidbey Island												
	USN	ACDU		1		1		1		1		1
		TOTAL:		1		1		1		1		1

II.B. ANNUAL TRAINING INPUT REQUIREMENTS

CIN, COURSE TITLE: D-130-9072, P-3 Aircraft Sonobuoy Receiving, Recording Reference System Intermediate Maintenance
COURSE LENGTH: 4.6 Weeks **NAVY TOUR LENGTH:** 36 Months
ATTRITION FACTOR: Navy: 10% **BACKOUT FACTOR:** 0.09

TRAINING		ACDU/TAR	CFY03		FY04		FY05		FY06		FY07	
ACTIVITY	SOURCE	SELRES	OFF	ENL	OFF	ENL	OFF	ENL	OFF	ENL	OFF	ENL
MTU 1011, NAMTRAU Jacksonville												
	USN	ACDU		3		3		3		3		3
		SELRES		1		0		0		0		0
		TOTAL:		4		3		3		3		3

CIN, COURSE TITLE: E-130-9072, P-3 Aircraft Sonobuoy Receiving, Recording Reference System Intermediate Maintenance
COURSE LENGTH: 4.6 Weeks **NAVY TOUR LENGTH:** 36 Months
ATTRITION FACTOR: Navy: 10% **BACKOUT FACTOR:** 0.09

TRAINING		ACDU/TAR	CFY03		FY04		FY05		FY06		FY07	
ACTIVITY	SOURCE	SELRES	OFF	ENL	OFF	ENL	OFF	ENL	OFF	ENL	OFF	ENL
MTU 1012, NAMTRAU Whidbey Island												
	USN	ACDU		2		2		2		2		2
		SELRES		0		1		0		0		0
		TOTAL:		2		3		2		2		2

CIN, COURSE TITLE: D-198-6007, P-3 AN/USM-449A (V) Test Set Operator Intermediate Maintenance
COURSE LENGTH: 3.4 Weeks **NAVY TOUR LENGTH:** 36 Months
ATTRITION FACTOR: Navy: 10% **BACKOUT FACTOR:** 0.07

TRAINING		ACDU/TAR	CFY03		FY04		FY05		FY06		FY07	
ACTIVITY	SOURCE	SELRES	OFF	ENL	OFF	ENL	OFF	ENL	OFF	ENL	OFF	ENL
MTU 1011, NAMTRAU Jacksonville												
	USN	ACDU		5		5		5		5		5
		SELRES		0		0		0		1		0
		TOTAL:		5		5		5		6		5

CIN, COURSE TITLE: D-198-6009, P-3 AN/USM-449A (V) Automatic Test System Maintenance Technician
COURSE LENGTH: 14.4 Weeks **NAVY TOUR LENGTH:** 36 Months
ATTRITION FACTOR: Navy: 10% **BACKOUT FACTOR:** 0.29

TRAINING		ACDU/TAR	CFY03		FY04		FY05		FY06		FY07	
ACTIVITY	SOURCE	SELRES	OFF	ENL	OFF	ENL	OFF	ENL	OFF	ENL	OFF	ENL
MTU 1011, NAMTRAU Jacksonville												
	USN	ACDU		9		9		9		9		9
		TOTAL:		9		9		9		9		9

II.B. ANNUAL TRAINING INPUT REQUIREMENTS

CIN, COURSE TITLE: D-601-3001, T-56 Engine First Degree Intermediate Maintenance
COURSE LENGTH: 8.4 Weeks **NAVY TOUR LENGTH:** 36 Months
ATTRITION FACTOR: Navy: 10% **BACKOUT FACTOR:** 0.17

TRAINING		ACDU/TAR	CFY03		FY04		FY05		FY06		FY07	
ACTIVITY	SOURCE	SELRES	OFF	ENL	OFF	ENL	OFF	ENL	OFF	ENL	OFF	ENL
MTU 1011, NAMTRAU Jacksonville												
	USN	ACDU		36		36		36		36		36
		SELRES		0		0		0		0		1
		TOTAL:		36		36		36		36		37

CIN, COURSE TITLE: E-601-3001, T-56 Engine First Degree Intermediate Maintenance
COURSE LENGTH: 8.4 Weeks **NAVY TOUR LENGTH:** 36 Months
ATTRITION FACTOR: Navy: 10% **BACKOUT FACTOR:** 0.17

TRAINING		ACDU/TAR	CFY03		FY04		FY05		FY06		FY07	
ACTIVITY	SOURCE	SELRES	OFF	ENL	OFF	ENL	OFF	ENL	OFF	ENL	OFF	ENL
MTU 1012, NAMTRAU Whidbey Island												
	USN	ACDU		20		20		20		20		20
		SELRES		0		1		0		1		0
		TOTAL:		20		21		20		21		20

CIN, COURSE TITLE: D-602-4008, Hydraulic Components Intermediate Maintenance
COURSE LENGTH: 3.4 Weeks **NAVY TOUR LENGTH:** 36 Months
ATTRITION FACTOR: Navy: 10% **BACKOUT FACTOR:** 0.07

TRAINING		ACDU/TAR	CFY03		FY04		FY05		FY06		FY07	
ACTIVITY	SOURCE	SELRES	OFF	ENL	OFF	ENL	OFF	ENL	OFF	ENL	OFF	ENL
MTU 1007, NAMTRAU Oceana												
	USN	ACDU		3		3		3		3		3
		TOTAL:		3		3		3		3		3

CIN, COURSE TITLE: E-602-4008, Hydraulic Components Intermediate Maintenance
COURSE LENGTH: 3.4 Weeks **NAVY TOUR LENGTH:** 36 Months
ATTRITION FACTOR: Navy: 10% **BACKOUT FACTOR:** 0.07

TRAINING		ACDU/TAR	CFY03		FY04		FY05		FY06		FY07	
ACTIVITY	SOURCE	SELRES	OFF	ENL	OFF	ENL	OFF	ENL	OFF	ENL	OFF	ENL
MTU 1038, NAMTRAU Lemoore												
	USN	ACDU		3		3		3		3		3
		TAR		1		1		1		1		1
		SELRES		0		1		0		0		1
		TOTAL:		4		5		4		4		5

II.B. ANNUAL TRAINING INPUT REQUIREMENTS

CIN, COURSE TITLE: D-602-5032, P-3 Automatic Flight Control System Intermediate Maintenance
COURSE LENGTH: 4.4 Weeks **NAVY TOUR LENGTH:** 36 Months
ATTRITION FACTOR: Navy: 10% **BACKOUT FACTOR:** 0.09

TRAINING		ACDU/TAR	CFY03		FY04		FY05		FY06		FY07	
ACTIVITY	SOURCE	SELRES	OFF	ENL	OFF	ENL	OFF	ENL	OFF	ENL	OFF	ENL
MTU 1011, NAMTRAU Jacksonville												
	USN	ACDU		5		5		5		5		5
		TAR		1		1		1		1		1
		SELRES		0		0		0		0		0
		TOTAL:		6		6		6		6		6

CIN, COURSE TITLE: E-602-5032, P-3 Automatic Flight Control System Intermediate Maintenance
COURSE LENGTH: 4.4 Weeks **NAVY TOUR LENGTH:** 36 Months
ATTRITION FACTOR: Navy: 10% **BACKOUT FACTOR:** 0.09

TRAINING		ACDU/TAR	CFY03		FY04		FY05		FY06		FY07	
ACTIVITY	SOURCE	SELRES	OFF	ENL	OFF	ENL	OFF	ENL	OFF	ENL	OFF	ENL
MTU 1012, NAMTRAU Whidbey Island												
	USN	ACDU		3		3		3		3		3
		TAR		1		1		1		1		1
		SELRES		0		0		0		0		0
		TOTAL:		4		4		4		4		4

CIN, COURSE TITLE: D-602-5062, Aircraft Sealed Instrument Intermediate Repair
COURSE LENGTH: 6.4 Weeks **NAVY TOUR LENGTH:** 36 Months
ATTRITION FACTOR: Navy: 10% **BACKOUT FACTOR:** 0.13

TRAINING		ACDU/TAR	CFY03		FY04		FY05		FY06		FY07	
ACTIVITY	SOURCE	SELRES	OFF	ENL	OFF	ENL	OFF	ENL	OFF	ENL	OFF	ENL
MTU 1011, NAMTRAU Jacksonville												
	USN	ACDU		8		8		8		8		8
		TOTAL:		8		8		8		8		8

CIN, COURSE TITLE: E-602-5062, Aircraft Sealed Instrument Intermediate Repair
COURSE LENGTH: 6.4 Weeks **NAVY TOUR LENGTH:** 36 Months
ATTRITION FACTOR: Navy: 10% **BACKOUT FACTOR:** 0.13

TRAINING		ACDU/TAR	CFY03		FY04		FY05		FY06		FY07	
ACTIVITY	SOURCE	SELRES	OFF	ENL	OFF	ENL	OFF	ENL	OFF	ENL	OFF	ENL
MTU 1025, NAMTRAGRU DET MCAS Miramar												
	USN	ACDU		4		4		4		4		4
		SELRES		0		0		0		0		0
		TOTAL:		4		4		4		4		4

II.B. ANNUAL TRAINING INPUT REQUIREMENTS

CIN, COURSE TITLE: D-603-4007, Airframes Intermediate Maintenance
COURSE LENGTH: 4.4 Weeks **NAVY TOUR LENGTH:** 36 Months
ATTRITION FACTOR: Navy: 10% **BACKOUT FACTOR:** 0.09

TRAINING		ACDU/TAR	CFY03		FY04		FY05		FY06		FY07	
ACTIVITY	SOURCE	SELRES	OFF	ENL	OFF	ENL	OFF	ENL	OFF	ENL	OFF	ENL
MTU 1039, NAMTRAU Oceana												
	USN	ACDU		13		13		13		13		13
		TOTAL:		13		13		13		13		13

CIN, COURSE TITLE: E-603-4007, Airframes Intermediate Maintenance
COURSE LENGTH: 4.4 Weeks **NAVY TOUR LENGTH:** 36 Months
ATTRITION FACTOR: Navy: 10% **BACKOUT FACTOR:** 0.09

TRAINING		ACDU/TAR	CFY03		FY04		FY05		FY06		FY07	
ACTIVITY	SOURCE	SELRES	OFF	ENL	OFF	ENL	OFF	ENL	OFF	ENL	OFF	ENL
MTU 1038, NAMTRAU Lemoore												
	USN	ACDU		9		9		9		9		9
		TOTAL:		9		9		9		9		9

CIN, COURSE TITLE: D-646-7001, Strike Armament Systems Intermediate Maintenance
COURSE LENGTH: 9.4 Weeks **NAVY TOUR LENGTH:** 36 Months
ATTRITION FACTOR: Navy: 10% **BACKOUT FACTOR:** 0.19

TRAINING		ACDU/TAR	CFY03		FY04		FY05		FY06		FY07	
ACTIVITY	SOURCE	SELRES	OFF	ENL	OFF	ENL	OFF	ENL	OFF	ENL	OFF	ENL
NAMTRA UNIT, NS Norfolk												
	USN	ACDU		8		8		8		8		8
		TOTAL:		8		8		8		8		8

CIN, COURSE TITLE: E-646-7001, Strike Armament Systems Intermediate Maintenance
COURSE LENGTH: 9.4 Weeks **NAVY TOUR LENGTH:** 36 Months
ATTRITION FACTOR: Navy: 10% **BACKOUT FACTOR:** 0.19

TRAINING		ACDU/TAR	CFY03		FY04		FY05		FY06		FY07	
ACTIVITY	SOURCE	SELRES	OFF	ENL	OFF	ENL	OFF	ENL	OFF	ENL	OFF	ENL
MTU 1036, NAMTRAU North Island												
	USN	ACDU		5		5		5		5		5
		SELRES		0		1		0		1		0
		TOTAL:		5		6		5		6		5

II.B. ANNUAL TRAINING INPUT REQUIREMENTS

CIN, COURSE TITLE: R-050-6124, P-3C Flight Crew Ordnance
COURSE LENGTH: 2.0 Weeks **NAVY TOUR LENGTH:** 36 Months
ATTRITION FACTOR: Navy: 25% **BACKOUT FACTOR:** 0.00

TRAINING		ACDU/TAR	CFY03		FY04		FY05		FY06		FY07	
ACTIVITY	SOURCE	SELRES	OFF	ENL	OFF	ENL	OFF	ENL	OFF	ENL	OFF	ENL
Reserve ASW Training Center, NAS Willow Grove, PA												
	USN	TAR	8		8		8		8		8	
		SELRES	7		7		7		7		7	
		TOTAL:	15		15		15		15		15	

CIN, COURSE TITLE: D-102-6719, P-3C Aircraft Improvement Program Weapons System Organizational Maintenance
COURSE LENGTH: 6.0 Weeks **NAVY TOUR LENGTH:** 36 Months
ATTRITION FACTOR: Navy: 10% **BACKOUT FACTOR:** 0.12

TRAINING		ACDU/TAR	CFY03		FY04		FY05		FY06		FY07	
ACTIVITY	SOURCE	SELRES	OFF	ENL	OFF	ENL	OFF	ENL	OFF	ENL	OFF	ENL
MTU 1011, NAMTRAU Jacksonville												
	USN	ACDU	23		23		23		23		23	
		TAR	5		5		5		5		5	
		SELRES	0		1		0		1		0	
		TOTAL:	28		29		28		29		28	

PART III - TRAINING REQUIREMENTS

The following elements are not affected by the P-3C Series Aircraft and, therefore, are not included in Part III of this NTSP:

III.A.1. Initial Training Requirements

III.A.2. Follow-on Training

III.A.2.b. Planned Courses

III.A.3. Existing Training Phased Out

Note: Initial Training Requirements are completed.

PART III - TRAINING REQUIREMENTS

III.A. TRAINING COURSE REQUIREMENTS

III.A.1. INITIAL TRAINING REQUIREMENTS

III.A.2. FOLLOW-ON TRAINING

III.A.2.a. EXISTING COURSES

CIN, COURSE TITLE: D-2A-1104, P-3C Update Replacement Pilot Category 4
TRAINING ACTIVITY: VP-30 Fleet Replacement Squadron
LOCATION, UIC: NAS Jacksonville, 65554

SOURCE: USN **STUDENT CATEGORY:** ACDU - TAR

CFY03		FY04		FY05		FY06		FY07		
OFF	ENL	OFF	ENL	OFF	ENL	OFF	ENL	OFF	ENL	
44		44		44		44		44		ATIR
44		44		44		44		44		Output
1.4		1.4		1.4		1.4		1.4		AOB
1.4		1.4		1.4		1.4		1.4		Chargeable

SOURCE: USN **STUDENT CATEGORY:** SELRES

CFY03		FY04		FY05		FY06		FY07		
OFF	ENL	OFF	ENL	OFF	ENL	OFF	ENL	OFF	ENL	
5		5		5		5		5		ATIR
5		5		5		5		5		Output
0.2		0.2		0.2		0.2		0.2		AOB
0.0		0.0		0.0		0.0		0.0		Chargeable

CIN, COURSE TITLE: D-2A-1111, P-3C Update Fleet Replacement Pilot Category 1 Pipeline
TRAINING ACTIVITY: VP-30 Fleet Replacement Squadron
LOCATION, UIC: NAS Jacksonville, 65554

SOURCE: USN **STUDENT CATEGORY:** ACDU - TAR

CFY03		FY04		FY05		FY06		FY07		
OFF	ENL	OFF	ENL	OFF	ENL	OFF	ENL	OFF	ENL	
46		46		46		46		46		ATIR
46		46		46		46		46		Output
23.2		23.2		23.2		23.2		23.2		AOB
23.2		23.2		23.2		23.2		23.2		Chargeable

SOURCE: USN **STUDENT CATEGORY:** SELRES

CFY03		FY04		FY05		FY06		FY07		
OFF	ENL	OFF	ENL	OFF	ENL	OFF	ENL	OFF	ENL	
5		5		5		5		5		ATIR
5		5		5		5		5		Output
2.5		2.5		2.5		2.5		2.5		AOB
0.0		0.0		0.0		0.0		0.0		Chargeable

III.A.2.a. EXISTING COURSES

CIN, COURSE TITLE: D-2A-1112, P-3 Fleet Replacement Pilot Category 3 Pipeline
TRAINING ACTIVITY: VP-30 Fleet Replacement Squadron
LOCATION, UIC: NAS Jacksonville, 65554

SOURCE: USN **STUDENT CATEGORY:** ACDU - TAR

CFY03		FY04		FY05		FY06		FY07		
OFF	ENL	OFF	ENL	OFF	ENL	OFF	ENL	OFF	ENL	
46		46		46		46		46		ATIR
46		46		46		46		46		Output
18.7		18.7		18.7		18.7		18.7		AOB
18.7		18.7		18.7		18.7		18.7		Chargeable

SOURCE: USN **STUDENT CATEGORY:** SELRES

CFY03		FY04		FY05		FY06		FY07		
OFF	ENL	OFF	ENL	OFF	ENL	OFF	ENL	OFF	ENL	
5		5		5		5		5		ATIR
5		5		5		5		5		Output
2.0		2.0		2.0		2.0		2.0		AOB
0.0		0.0		0.0		0.0		0.0		Chargeable

CIN, COURSE TITLE: D-2A-1113, P-3C Update Fleet Replacement Pilot Category 5 Pipeline
TRAINING ACTIVITY: VP-30 Fleet Replacement Squadron
LOCATION, UIC: NAS Jacksonville, 65554

SOURCE: USN **STUDENT CATEGORY:** ACDU - TAR

CFY03		FY04		FY05		FY06		FY07		
OFF	ENL	OFF	ENL	OFF	ENL	OFF	ENL	OFF	ENL	
40		40		40		40		40		ATIR
40		40		40		40		40		Output
3.2		3.2		3.2		3.2		3.2		AOB
3.2		3.2		3.2		3.2		3.2		Chargeable

SOURCE: USN **STUDENT CATEGORY:** SELRES

CFY03		FY04		FY05		FY06		FY07		
OFF	ENL	OFF	ENL	OFF	ENL	OFF	ENL	OFF	ENL	
4		4		4		4		4		ATIR
4		4		4		4		4		Output
0.3		0.3		0.3		0.3		0.3		AOB
0.0		0.0		0.0		0.0		0.0		Chargeable

III.A.2.a. EXISTING COURSES

CIN, COURSE TITLE: D-2A-1115, P-3 Fleet Replacement Pilot (Non-USW) Category 1 Pipeline
TRAINING ACTIVITY: VP-30 Fleet Replacement Squadron
LOCATION, UIC: NAS Jacksonville, 65554

SOURCE: USN **STUDENT CATEGORY:** ACDU - TAR

CFY03		FY04		FY05		FY06		FY07		
OFF	ENL	OFF	ENL	OFF	ENL	OFF	ENL	OFF	ENL	
98		98		98		98		98		ATIR
98		98		98		98		98		Output
32.0		32.0		32.0		32.0		32.0		AOB
32.0		32.0		32.0		32.0		32.0		Chargeable

SOURCE: USN **STUDENT CATEGORY:** SELRES

CFY03		FY04		FY05		FY06		FY07		
OFF	ENL	OFF	ENL	OFF	ENL	OFF	ENL	OFF	ENL	
9		9		9		9		9		ATIR
9		9		9		9		9		Output
2.9		2.9		2.9		2.9		2.9		AOB
0.0		0.0		0.0		0.0		0.0		Chargeable

CIN, COURSE TITLE: D-2A-1116, P-3C Fleet Replacement Pilot (Non-USW) Category 3 Pipeline
TRAINING ACTIVITY: VP-30 Fleet Replacement Squadron
LOCATION, UIC: NAS Jacksonville, 65554

SOURCE: USN **STUDENT CATEGORY:** ACDU - TAR

CFY03		FY04		FY05		FY06		FY07		
OFF	ENL	OFF	ENL	OFF	ENL	OFF	ENL	OFF	ENL	
46		46		46		46		46		ATIR
46		46		46		46		46		Output
17.3		17.3		17.3		17.3		17.3		AOB
17.3		17.3		17.3		17.3		17.3		Chargeable

SOURCE: USN **STUDENT CATEGORY:** SELRES

CFY03		FY04		FY05		FY06		FY07		
OFF	ENL	OFF	ENL	OFF	ENL	OFF	ENL	OFF	ENL	
5		5		5		5		5		ATIR
5		5		5		5		5		Output
1.9		1.9		1.9		1.9		1.9		AOB
0.0		0.0		0.0		0.0		0.0		Chargeable

III.A.2.a. EXISTING COURSES

CIN, COURSE TITLE: D-2D-1105, P-3C Pilot Instructor Under Training (IUT)
TRAINING ACTIVITY: VP-30 Fleet Replacement Squadron
LOCATION, UIC: NAS Jacksonville, 65554

SOURCE: USN **STUDENT CATEGORY:** ACDU - TAR

CFY03		FY04		FY05		FY06		FY07		
OFF	ENL	OFF	ENL	OFF	ENL	OFF	ENL	OFF	ENL	
19		19		19		19		19		ATIR
19		19		19		19		19		Output
6.8		6.8		6.8		6.8		6.8		AOB
6.8		6.8		6.8		6.8		6.8		Chargeable

CIN, COURSE TITLE: D-2D-1107, P-3C NFO (TACCO) Category 4 (Post Command)
TRAINING ACTIVITY: VP-30 Fleet Replacement Squadron
LOCATION, UIC: NAS Jacksonville, 65554

SOURCE: USN **STUDENT CATEGORY:** ACDU - TAR

CFY03		FY04		FY05		FY06		FY07		
OFF	ENL	OFF	ENL	OFF	ENL	OFF	ENL	OFF	ENL	
22		22		22		22		22		ATIR
22		22		22		22		22		Output
0.8		0.8		0.8		0.8		0.8		AOB
0.8		0.8		0.8		0.8		0.8		Chargeable

SOURCE: USN **STUDENT CATEGORY:** SELRES

CFY03		FY04		FY05		FY06		FY07		
OFF	ENL	OFF	ENL	OFF	ENL	OFF	ENL	OFF	ENL	
2		2		2		2		2		ATIR
2		2		2		2		2		Output
0.1		0.1		0.1		0.1		0.1		AOB
0.0		0.0		0.0		0.0		0.0		Chargeable

CIN, COURSE TITLE: D-2D-1111, P-3C Fleet Replacement NFO Category 1 Pipeline
TRAINING ACTIVITY: VP-30 Fleet Replacement Squadron
LOCATION, UIC: NAS Jacksonville, 65554

SOURCE: USN **STUDENT CATEGORY:** ACDU - TAR

CFY03		FY04		FY05		FY06		FY07		
OFF	ENL	OFF	ENL	OFF	ENL	OFF	ENL	OFF	ENL	
35		35		35		35		35		ATIR
35		35		35		35		35		Output
16.3		16.3		16.3		16.3		16.3		AOB
16.3		16.3		16.3		16.3		16.3		Chargeable

III.A.2.a. EXISTING COURSES

SOURCE: USN **STUDENT CATEGORY:** SELRES

CFY03		FY04		FY05		FY06		FY07		
OFF	ENL	OFF	ENL	OFF	ENL	OFF	ENL	OFF	ENL	
3		3		3		3		3		ATIR
3		3		3		3		3		Output
1.4		1.4		1.4		1.4		1.4		AOB
0.0		0.0		0.0		0.0		0.0		Chargeable

CIN, COURSE TITLE: D-2D-1112, P-3C Replacement NFO Category 3 Pipeline
TRAINING ACTIVITY: VP-30 Fleet Replacement Squadron
LOCATION, UIC: NAS Jacksonville, 65554

SOURCE: USN **STUDENT CATEGORY:** ACDU - TAR

CFY03		FY04		FY05		FY06		FY07		
OFF	ENL	OFF	ENL	OFF	ENL	OFF	ENL	OFF	ENL	
31		31		31		31		31		ATIR
31		31		31		31		31		Output
12.8		12.8		12.8		12.8		12.8		AOB
12.8		12.8		12.8		12.8		12.8		Chargeable

SOURCE: USN **STUDENT CATEGORY:** SELRES

CFY03		FY04		FY05		FY06		FY07		
OFF	ENL	OFF	ENL	OFF	ENL	OFF	ENL	OFF	ENL	
3		3		3		3		3		ATIR
3		3		3		3		3		Output
1.2		1.2		1.2		1.2		1.2		AOB
0.0		0.0		0.0		0.0		0.0		Chargeable

CIN, COURSE TITLE: D-2D-1113, P-3C Replacement Naval Flight Officer Category 4 Pipeline
TRAINING ACTIVITY: VP-30 Fleet Replacement Squadron
LOCATION, UIC: NAS Jacksonville, 65554

SOURCE: USN **STUDENT CATEGORY:** ACDU - TAR

CFY03		FY04		FY05		FY06		FY07		
OFF	ENL	OFF	ENL	OFF	ENL	OFF	ENL	OFF	ENL	
19		19		19		19		19		ATIR
19		19		19		19		19		Output
1.9		1.9		1.9		1.9		1.9		AOB
1.9		1.9		1.9		1.9		1.9		Chargeable

III.A.2.a. EXISTING COURSES

SOURCE: USN **STUDENT CATEGORY:** SELRES

CFY03		FY04		FY05		FY06		FY07		
OFF	ENL	OFF	ENL	OFF	ENL	OFF	ENL	OFF	ENL	
2		2		2		2		2		ATIR
2		2		2		2		2		Output
0.2		0.2		0.2		0.2		0.2		AOB
0.0		0.0		0.0		0.0		0.0		Chargeable

CIN, COURSE TITLE: D-050-1003, P-3 Flight Engineer Instructor Under Training (IUT)
TRAINING ACTIVITY: VP-30 Fleet Replacement Squadron
LOCATION, UIC: NAS Jacksonville, 65554

SOURCE: USN **STUDENT CATEGORY:** ACDU - TAR

CFY03		FY04		FY05		FY06		FY07		
OFF	ENL	OFF	ENL	OFF	ENL	OFF	ENL	OFF	ENL	
	1		1		1		1		1	ATIR
	1		1		1		1		1	Output
	0.2		0.2		0.2		0.2		0.2	AOB
	0.2		0.2		0.2		0.2		0.2	Chargeable

CIN, COURSE TITLE: D-050-1008, P-3C Replacement Flight Engineer Category 3 Pipeline
TRAINING ACTIVITY: VP-30 Fleet Replacement Squadron
LOCATION, UIC: NAS Jacksonville, 65554

SOURCE: USN **STUDENT CATEGORY:** ACDU - TAR

CFY03		FY04		FY05		FY06		FY07		
OFF	ENL	OFF	ENL	OFF	ENL	OFF	ENL	OFF	ENL	
	47		47		47		47		47	ATIR
	42		42		42		42		42	Output
	9.6		9.6		9.6		9.6		9.6	AOB
	9.6		9.6		9.6		9.6		9.6	Chargeable

SOURCE: USN **STUDENT CATEGORY:** SELRES

CFY03		FY04		FY05		FY06		FY07		
OFF	ENL	OFF	ENL	OFF	ENL	OFF	ENL	OFF	ENL	
	2		2		2		2		2	ATIR
	2		2		2		2		2	Output
	0.4		0.4		0.4		0.4		0.4	AOB
	0.0		0.0		0.0		0.0		0.0	Chargeable

III.A.2.a. EXISTING COURSES

CIN, COURSE TITLE: D-050-1010, P-3 Replacement Flight Engineer Category 1 Pipeline
TRAINING ACTIVITY: VP-30 Fleet Replacement Squadron
LOCATION, UIC: NAS Jacksonville, 65554

SOURCE: USN **STUDENT CATEGORY:** ACDU - TAR

CFY03		FY04		FY05		FY06		FY07		
OFF	ENL	OFF	ENL	OFF	ENL	OFF	ENL	OFF	ENL	
	85		85		85		85		85	ATIR
	77		77		77		77		77	Output
	51.6		51.6		51.6		51.6		51.6	AOB
	51.6		51.6		51.6		51.6		51.6	Chargeable

SOURCE: USN **STUDENT CATEGORY:** SELRES

CFY03		FY04		FY05		FY06		FY07		
OFF	ENL	OFF	ENL	OFF	ENL	OFF	ENL	OFF	ENL	
	4		4		4		4		4	ATIR
	4		4		4		4		4	Output
	2.6		2.6		2.6		2.6		2.6	AOB
	0.0		0.0		0.0		0.0		0.0	Chargeable

CIN, COURSE TITLE: D-050-1130, P-3C Update III In-Flight Technician Category I
TRAINING ACTIVITY: VP-30 Fleet Replacement Squadron
LOCATION, UIC: NAS Jacksonville, 65554

SOURCE: USN **STUDENT CATEGORY:** ACDU - TAR

CFY03		FY04		FY05		FY06		FY07		
OFF	ENL	OFF	ENL	OFF	ENL	OFF	ENL	OFF	ENL	
	42		42		42		42		42	ATIR
	38		38		38		38		38	Output
	20.0		20.0		20.0		20.0		20.0	AOB
	20.0		20.0		20.0		20.0		20.0	Chargeable

SOURCE: USN **STUDENT CATEGORY:** SELRES

CFY03		FY04		FY05		FY06		FY07		
OFF	ENL	OFF	ENL	OFF	ENL	OFF	ENL	OFF	ENL	
	2		2		2		2		2	ATIR
	2		2		2		2		2	Output
	1.0		1.0		1.0		1.0		1.0	AOB
	0.0		0.0		0.0		0.0		0.0	Chargeable

III.A.2.a. EXISTING COURSES

CIN, COURSE TITLE: D-050-1132, P-3C Fleet Replacement Non-Acoustic Operator Category 1 Pipeline
TRAINING ACTIVITY: VP-30 Fleet Replacement Squadron
LOCATION, UIC: NAS Jacksonville, 65554

SOURCE: USN **STUDENT CATEGORY:** ACDU - TAR

CFY03		FY04		FY05		FY06		FY07		
OFF	ENL	OFF	ENL	OFF	ENL	OFF	ENL	OFF	ENL	
	63		63		63		63		63	ATIR
	57		57		57		57		57	Output
	32.6		32.6		32.6		32.6		32.6	AOB
	32.6		32.6		32.6		32.6		32.6	Chargeable

SOURCE: USN **STUDENT CATEGORY:** SELRES

CFY03		FY04		FY05		FY06		FY07		
OFF	ENL	OFF	ENL	OFF	ENL	OFF	ENL	OFF	ENL	
	5		5		5		5		5	ATIR
	5		5		5		5		5	Output
	2.7		2.7		2.7		2.7		2.7	AOB
	0.0		0.0		0.0		0.0		0.0	Chargeable

CIN, COURSE TITLE: D-050-1133, P-3 Non-Acoustic Operator Instructor Under Training (IUT)
TRAINING ACTIVITY: VP-30 Fleet Replacement Squadron
LOCATION, UIC: NAS Jacksonville, 65554

SOURCE: USN **STUDENT CATEGORY:** ACDU - TAR

CFY03		FY04		FY05		FY06		FY07		
OFF	ENL	OFF	ENL	OFF	ENL	OFF	ENL	OFF	ENL	
	13		13		13		13		13	ATIR
	12		12		12		12		12	Output
	2.3		2.3		2.3		2.3		2.3	AOB
	2.3		2.3		2.3		2.3		2.3	Chargeable

CIN, COURSE TITLE: D-050-1134, P-3C AIP In-Flight Technician Instructor Under Training (IUT)
TRAINING ACTIVITY: VP-30 Fleet Replacement Squadron
LOCATION, UIC: NAS Jacksonville, 65554

SOURCE: USN **STUDENT CATEGORY:** ACDU - TAR

CFY03		FY04		FY05		FY06		FY07		
OFF	ENL	OFF	ENL	OFF	ENL	OFF	ENL	OFF	ENL	
	1		1		1		1		1	ATIR
	1		1		1		1		1	Output
	0.1		0.1		0.1		0.1		0.1	AOB
	0.1		0.1		0.1		0.1		0.1	Chargeable

III.A.2.a. EXISTING COURSES

CIN, COURSE TITLE: D-050-1136, P-3C Update III Non-Acoustic Operator Category 3 Pipeline
TRAINING ACTIVITY: VP-30 Fleet Replacement Squadron
LOCATION, UIC: NAS Jacksonville, 65554

SOURCE: USN **STUDENT CATEGORY:** ACDU - TAR

CFY03		FY04		FY05		FY06		FY07		
OFF	ENL	OFF	ENL	OFF	ENL	OFF	ENL	OFF	ENL	
	36		36		36		36		36	ATIR
	32		32		32		32		32	Output
	5.7		5.7		5.7		5.7		5.7	AOB
	5.7		5.7		5.7		5.7		5.7	Chargeable

SOURCE: USN **STUDENT CATEGORY:** SELRES

CFY03		FY04		FY05		FY06		FY07		
OFF	ENL	OFF	ENL	OFF	ENL	OFF	ENL	OFF	ENL	
	2		2		2		2		2	ATIR
	2		2		2		2		2	Output
	0.3		0.3		0.3		0.3		0.3	AOB
	0.0		0.0		0.0		0.0		0.0	Chargeable

CIN, COURSE TITLE: D-050-1140, P-3C Update III Acoustic Sensor Operator Category 3 Pipeline
TRAINING ACTIVITY: VP-30 Fleet Replacement Squadron
LOCATION, UIC: NAS Jacksonville, 65554

SOURCE: USN **STUDENT CATEGORY:** ACDU - TAR

CFY03		FY04		FY05		FY06		FY07		
OFF	ENL	OFF	ENL	OFF	ENL	OFF	ENL	OFF	ENL	
	74		74		74		74		74	ATIR
	67		67		67		67		67	Output
	9.6		9.6		9.6		9.6		9.6	AOB
	9.6		9.6		9.6		9.6		9.6	Chargeable

SOURCE: USN **STUDENT CATEGORY:** SELRES

CFY03		FY04		FY05		FY06		FY07		
OFF	ENL	OFF	ENL	OFF	ENL	OFF	ENL	OFF	ENL	
	3		3		3		3		3	ATIR
	3		3		3		3		3	Output
	0.4		0.4		0.4		0.4		0.4	AOB
	0.0		0.0		0.0		0.0		0.0	Chargeable

III.A.2.a. EXISTING COURSES

CIN, COURSE TITLE: D-050-1150, P-3C Update III In-Flight Technician Category 3 Pipeline (Refresher)
TRAINING ACTIVITY: VP-30 Fleet Replacement Squadron
LOCATION, UIC: NAS Jacksonville, 65554

SOURCE: USN **STUDENT CATEGORY:** ACDU - TAR

CFY03		FY04		FY05		FY06		FY07		
OFF	ENL	OFF	ENL	OFF	ENL	OFF	ENL	OFF	ENL	
	37		37		37		37		37	ATIR
	33		33		33		33		33	Output
	6.2		6.2		6.2		6.2		6.2	AOB
	6.2		6.2		6.2		6.2		6.2	Chargeable

SOURCE: USN **STUDENT CATEGORY:** SELRES

CFY03		FY04		FY05		FY06		FY07		
OFF	ENL	OFF	ENL	OFF	ENL	OFF	ENL	OFF	ENL	
	2		2		2		2		2	ATIR
	2		2		2		2		2	Output
	0.4		0.4		0.4		0.4		0.4	AOB
	0.0		0.0		0.0		0.0		0.0	Chargeable

CIN, COURSE TITLE: D-050-1161, P-3C APS 115 Weather Avoidance and Radar Safety of Flight Operator
TRAINING ACTIVITY: VP-30 Fleet Replacement Squadron
LOCATION, UIC: NAS Jacksonville, 65554

SOURCE: USN **STUDENT CATEGORY:** ACDU - TAR

CFY03		FY04		FY05		FY06		FY07		
OFF	ENL	OFF	ENL	OFF	ENL	OFF	ENL	OFF	ENL	
	25		25		25		25		25	ATIR
	22		22		22		22		22	Output
	1.6		1.6		1.6		1.6		1.6	AOB
	1.6		1.6		1.6		1.6		1.6	Chargeable

SOURCE: USN **STUDENT CATEGORY:** SELRES

CFY03		FY04		FY05		FY06		FY07		
OFF	ENL	OFF	ENL	OFF	ENL	OFF	ENL	OFF	ENL	
	2		2		2		2		2	ATIR
	2		2		2		2		2	Output
	0.1		0.1		0.1		0.1		0.1	AOB
	0.0		0.0		0.0		0.0		0.0	Chargeable

III.A.2.a. EXISTING COURSES

CIN, COURSE TITLE: D-050-1230, P-3C Update III Acoustic Operator Category 1 Pipeline
TRAINING ACTIVITY: VP-30 Fleet Replacement Squadron
LOCATION, UIC: NAS Jacksonville, 65554

SOURCE: USN **STUDENT CATEGORY:** ACDU - TAR

CFY03		FY04		FY05		FY06		FY07		
OFF	ENL	OFF	ENL	OFF	ENL	OFF	ENL	OFF	ENL	
	92		92		92		92		92	ATIR
	83		83		83		83		83	Output
	41.2		41.2		41.2		41.2		41.2	AOB
	41.2		41.2		41.2		41.2		41.2	Chargeable

SOURCE: USN **STUDENT CATEGORY:** SELRES

CFY03		FY04		FY05		FY06		FY07		
OFF	ENL	OFF	ENL	OFF	ENL	OFF	ENL	OFF	ENL	
	4		4		4		4		4	ATIR
	4		4		4		4		4	Output
	1.9		1.9		1.9		1.9		1.9	AOB
	0.0		0.0		0.0		0.0		0.0	Chargeable

CIN, COURSE TITLE: D-210-1138, P-3C Update III Acoustic Operator Instructor Under Training (IUT)
TRAINING ACTIVITY: VP-30 Fleet Replacement Squadron
LOCATION, UIC: NAS Jacksonville, 65554

SOURCE: USN **STUDENT CATEGORY:** ACDU - TAR

CFY03		FY04		FY05		FY06		FY07		
OFF	ENL	OFF	ENL	OFF	ENL	OFF	ENL	OFF	ENL	
	18		18		18		18		18	ATIR
	16		16		16		16		16	Output
	3.1		3.1		3.1		3.1		3.1	AOB
	3.1		3.1		3.1		3.1		3.1	Chargeable

CIN, COURSE TITLE: D-102-1029, P-3C Weapon Systems Initial Organizational Maintenance
TRAINING ACTIVITY: MTU 1011
LOCATION, UIC: NAMTRAU Jacksonville, 66051

SOURCE: USN **STUDENT CATEGORY:** ACDU - TAR

CFY03		FY04		FY05		FY06		FY07		
OFF	ENL	OFF	ENL	OFF	ENL	OFF	ENL	OFF	ENL	
	60		60		60		60		60	ATIR
	54		54		54		54		54	Output
	19.2		19.2		19.2		19.2		19.2	AOB
	19.2		19.2		19.2		19.2		19.2	Chargeable

III.A.2.a. EXISTING COURSES

SOURCE: USN **STUDENT CATEGORY:** SELRES

CFY03		FY04		FY05		FY06		FY07		
OFF	ENL	OFF	ENL	OFF	ENL	OFF	ENL	OFF	ENL	
	2		2		2		2		2	ATIR
	2		2		2		2		2	Output
	0.7		0.7		0.7		0.7		0.7	AOB
	0.0		0.0		0.0		0.0		0.0	Chargeable

CIN, COURSE TITLE: E-102-1029, P-3C Weapon Systems Initial Organizational Maintenance
TRAINING ACTIVITY: MTU 1012
LOCATION, UIC: NAMTRAU Whidbey Island, 66058

SOURCE: USN **STUDENT CATEGORY:** ACDU - TAR

CFY03		FY04		FY05		FY06		FY07		
OFF	ENL	OFF	ENL	OFF	ENL	OFF	ENL	OFF	ENL	
	46		46		46		46		46	ATIR
	41		41		41		41		41	Output
	14.7		14.7		14.7		14.7		14.7	AOB
	14.7		14.7		14.7		14.7		14.7	Chargeable

SOURCE: USN **STUDENT CATEGORY:** SELRES

CFY03		FY04		FY05		FY06		FY07		
OFF	ENL	OFF	ENL	OFF	ENL	OFF	ENL	OFF	ENL	
	2		2		2		2		2	ATIR
	2		2		2		2		2	Output
	0.7		0.7		0.7		0.7		0.7	AOB
	0.0		0.0		0.0		0.0		0.0	Chargeable

CIN, COURSE TITLE: D-102-1132, P-3C Weapon Systems Career Organizational Maintenance
TRAINING ACTIVITY: MTU 1011
LOCATION, UIC: NAMTRAU Jacksonville, 66051

SOURCE: USN **STUDENT CATEGORY:** ACDU - TAR

CFY03		FY04		FY05		FY06		FY07		
OFF	ENL	OFF	ENL	OFF	ENL	OFF	ENL	OFF	ENL	
	25		25		25		25		25	ATIR
	23		23		23		23		23	Output
	2.5		2.5		2.5		2.5		2.5	AOB
	2.5		2.5		2.5		2.5		2.5	Chargeable

III.A.2.a. EXISTING COURSES

SOURCE: USN **STUDENT CATEGORY:** SELRES

CFY03		FY04		FY05		FY06		FY07		
OFF	ENL	OFF	ENL	OFF	ENL	OFF	ENL	OFF	ENL	
0		1		0		0		1		ATIR
0		1		0		0		1		Output
0.0		0.1		0.0		0.0		0.1		AOB
0.0		0.0		0.0		0.0		0.0		Chargeable

CIN, COURSE TITLE: E-102-1132, P-3C Weapon Systems Career Organizational Maintenance
TRAINING ACTIVITY: MTU 1012
LOCATION, UIC: NAMTRAU Whidbey Island, 66058

SOURCE: USN **STUDENT CATEGORY:** ACDU - TAR

CFY03		FY04		FY05		FY06		FY07		
OFF	ENL	OFF	ENL	OFF	ENL	OFF	ENL	OFF	ENL	
29		29		29		29		29		ATIR
26		26		26		26		26		Output
2.9		2.9		2.9		2.9		2.9		AOB
2.9		2.9		2.9		2.9		2.9		Chargeable

SOURCE: USN **STUDENT CATEGORY:** SELRES

CFY03		FY04		FY05		FY06		FY07		
OFF	ENL	OFF	ENL	OFF	ENL	OFF	ENL	OFF	ENL	
0		0		0		1		0		ATIR
0		0		0		1		0		Output
0.0		0.0		0.0		0.1		0.0		AOB
0.0		0.0		0.0		0.0		0.0		Chargeable

CIN, COURSE TITLE: D-601-1011, P-3 Power Plants and Related Systems Initial Organizational Maintenance
TRAINING ACTIVITY: MTU 1011
LOCATION, UIC: NAMTRAU Jacksonville, 66051

SOURCE: USN **STUDENT CATEGORY:** ACDU - TAR

CFY03		FY04		FY05		FY06		FY07		
OFF	ENL	OFF	ENL	OFF	ENL	OFF	ENL	OFF	ENL	
74		74		74		74		74		ATIR
67		67		67		67		67		Output
6.3		6.3		6.3		6.3		6.3		AOB
6.3		6.3		6.3		6.3		6.3		Chargeable

III.A.2.a. EXISTING COURSES

SOURCE: USN **STUDENT CATEGORY:** SELRES

CFY03		FY04		FY05		FY06		FY07		
OFF	ENL	OFF	ENL	OFF	ENL	OFF	ENL	OFF	ENL	
	2		2		2		2		2	ATIR
	2		2		2		2		2	Output
	0.2		0.2		0.2		0.2		0.2	AOB
	0.0		0.0		0.0		0.0		0.0	Chargeable

CIN, COURSE TITLE: E-601-1011, P-3 Power Plants and Related Systems Initial Organizational Maintenance
TRAINING ACTIVITY: MTU 1012
LOCATION, UIC: NAMTRAU Whidbey Island, 66058

SOURCE: USN **STUDENT CATEGORY:** ACDU - TAR

CFY03		FY04		FY05		FY06		FY07		
OFF	ENL	OFF	ENL	OFF	ENL	OFF	ENL	OFF	ENL	
	50		50		50		50		50	ATIR
	45		45		45		45		45	Output
	4.3		4.3		4.3		4.3		4.3	AOB
	4.3		4.3		4.3		4.3		4.3	Chargeable

SOURCE: USN **STUDENT CATEGORY:** SELRES

CFY03		FY04		FY05		FY06		FY07		
OFF	ENL	OFF	ENL	OFF	ENL	OFF	ENL	OFF	ENL	
	2		2		2		2		2	ATIR
	2		2		2		2		2	Output
	0.2		0.2		0.2		0.2		0.2	AOB
	0.0		0.0		0.0		0.0		0.0	Chargeable

CIN, COURSE TITLE: D-601-1110, P-3 Power Plants and Related Systems Career Organizational Maintenance
TRAINING ACTIVITY: MTU 1011
LOCATION, UIC: NAMTRAU Jacksonville, 66051

SOURCE: USN **STUDENT CATEGORY:** ACDU - TAR

CFY03		FY04		FY05		FY06		FY07		
OFF	ENL	OFF	ENL	OFF	ENL	OFF	ENL	OFF	ENL	
	26		26		26		26		26	ATIR
	23		23		23		23		23	Output
	1.1		1.1		1.1		1.1		1.1	AOB
	1.1		1.1		1.1		1.1		1.1	Chargeable

III.A.2.a. EXISTING COURSES

SOURCE: USN **STUDENT CATEGORY:** SELRES

CFY03		FY04		FY05		FY06		FY07		
OFF	ENL	OFF	ENL	OFF	ENL	OFF	ENL	OFF	ENL	
0		0		0		1		0		ATIR
0		0		0		1		0		Output
0.0		0.0		0.0		0.0		0.0		AOB
0.0		0.0		0.0		0.0		0.0		Chargeable

CIN, COURSE TITLE: E-601-1110, P-3 Power Plants and Related Systems Career Organizational Maintenance
TRAINING ACTIVITY: MTU 1012
LOCATION, UIC: NAMTRAU Whidbey Island, 66058

SOURCE: USN **STUDENT CATEGORY:** ACDU - TAR

CFY03		FY04		FY05		FY06		FY07		
OFF	ENL	OFF	ENL	OFF	ENL	OFF	ENL	OFF	ENL	
24		24		24		24		24		ATIR
22		22		22		22		22		Output
1.0		1.0		1.0		1.0		1.0		AOB
1.0		1.0		1.0		1.0		1.0		Chargeable

SOURCE: USN **STUDENT CATEGORY:** SELRES

CFY03		FY04		FY05		FY06		FY07		
OFF	ENL	OFF	ENL	OFF	ENL	OFF	ENL	OFF	ENL	
1		0		0		0		0		ATIR
1		0		0		0		0		Output
0.0		0.0		0.0		0.0		0.0		AOB
0.0		0.0		0.0		0.0		0.0		Chargeable

CIN, COURSE TITLE: D-602-1054, P-3C Electrical and Instrument Systems Initial Organizational Maintenance
TRAINING ACTIVITY: MTU 1011
LOCATION, UIC: NAMTRAU Jacksonville, 66051

SOURCE: USN **STUDENT CATEGORY:** ACDU - TAR

CFY03		FY04		FY05		FY06		FY07		
OFF	ENL	OFF	ENL	OFF	ENL	OFF	ENL	OFF	ENL	
32		32		32		32		32		ATIR
29		29		29		29		29		Output
3.9		3.9		3.9		3.9		3.9		AOB
3.9		3.9		3.9		3.9		3.9		Chargeable

III.A.2.a. EXISTING COURSES

SOURCE: USN **STUDENT CATEGORY:** SELRES

CFY03		FY04		FY05		FY06		FY07		
OFF	ENL	OFF	ENL	OFF	ENL	OFF	ENL	OFF	ENL	
1		1		1		1		1		ATIR
1		1		1		1		1		Output
0.1		0.1		0.1		0.1		0.1		AOB
0.0		0.0		0.0		0.0		0.0		Chargeable

CIN, COURSE TITLE: E-602-1054, P-3C Electrical and Instrument Systems Initial Organizational Maintenance
TRAINING ACTIVITY: MTU 1012
LOCATION, UIC: NAMTRAU Whidbey Island, 66058

SOURCE: USN **STUDENT CATEGORY:** ACDU - TAR

CFY03		FY04		FY05		FY06		FY07		
OFF	ENL	OFF	ENL	OFF	ENL	OFF	ENL	OFF	ENL	
32		32		32		32		32		ATIR
29		29		29		29		29		Output
3.9		3.9		3.9		3.9		3.9		AOB
3.9		3.9		3.9		3.9		3.9		Chargeable

SOURCE: USN **STUDENT CATEGORY:** SELRES

CFY03		FY04		FY05		FY06		FY07		
OFF	ENL	OFF	ENL	OFF	ENL	OFF	ENL	OFF	ENL	
1		1		1		1		1		ATIR
1		1		1		1		1		Output
0.1		0.1		0.1		0.1		0.1		AOB
0.0		0.0		0.0		0.0		0.0		Chargeable

CIN, COURSE TITLE: D-602-1080, P-3 Structures and Hydraulic Power and Flight Controls (Career) Organizational Maintenance
TRAINING ACTIVITY: MTU 1011
LOCATION, UIC: NAMTRAU Jacksonville, 66051

SOURCE: USN **STUDENT CATEGORY:** ACDU - TAR

CFY03		FY04		FY05		FY06		FY07		
OFF	ENL	OFF	ENL	OFF	ENL	OFF	ENL	OFF	ENL	
32		32		32		32		32		ATIR
29		29		29		29		29		Output
2.0		2.0		2.0		2.0		2.0		AOB
2.0		2.0		2.0		2.0		2.0		Chargeable

III.A.2.a. EXISTING COURSES

SOURCE: USN **STUDENT CATEGORY:** SELRES

CFY03		FY04		FY05		FY06		FY07		
OFF	ENL	OFF	ENL	OFF	ENL	OFF	ENL	OFF	ENL	
	1		1		1		1		1	ATIR
	1		1		1		1		1	Output
	0.1		0.1		0.1		0.1		0.1	AOB
	0.0		0.0		0.0		0.0		0.0	Chargeable

CIN, COURSE TITLE: E-602-1080, P-3 Structures and Hydraulic Power and Flight Controls (Career) Organizational Maintenance
TRAINING ACTIVITY: MTU 1012
LOCATION, UIC: NAMTRAU Whidbey Island, 66058

SOURCE: USN **STUDENT CATEGORY:** ACDU - TAR

CFY03		FY04		FY05		FY06		FY07		
OFF	ENL	OFF	ENL	OFF	ENL	OFF	ENL	OFF	ENL	
	27		27		27		27		27	ATIR
	24		24		24		24		24	Output
	1.7		1.7		1.7		1.7		1.7	AOB
	1.7		1.7		1.7		1.7		1.7	Chargeable

SOURCE: USN **STUDENT CATEGORY:** SELRES

CFY03		FY04		FY05		FY06		FY07		
OFF	ENL	OFF	ENL	OFF	ENL	OFF	ENL	OFF	ENL	
	1		1		1		1		1	ATIR
	1		1		1		1		1	Output
	0.1		0.1		0.1		0.1		0.1	AOB
	0.0		0.0		0.0		0.0		0.0	Chargeable

CIN, COURSE TITLE: D-602-1081, P-3 Airframe and Hydraulic Systems Initial Organizational Maintenance
TRAINING ACTIVITY: MTU 1011
LOCATION, UIC: NAMTRAU Jacksonville, 66051

SOURCE: USN **STUDENT CATEGORY:** ACDU - TAR

CFY03		FY04		FY05		FY06		FY07		
OFF	ENL	OFF	ENL	OFF	ENL	OFF	ENL	OFF	ENL	
	67		67		67		67		67	ATIR
	60		60		60		60		60	Output
	2.6		2.6		2.6		2.6		2.6	AOB
	2.6		2.6		2.6		2.6		2.6	Chargeable

III.A.2.a. EXISTING COURSES

SOURCE: USN **STUDENT CATEGORY:** SELRES

CFY03		FY04		FY05		FY06		FY07		
OFF	ENL	OFF	ENL	OFF	ENL	OFF	ENL	OFF	ENL	
	2		2		2		2		2	ATIR
	2		2		2		2		2	Output
	0.1		0.1		0.1		0.1		0.1	AOB
	0.0		0.0		0.0		0.0		0.0	Chargeable

CIN, COURSE TITLE: E-602-1081, P-3 Airframe and Hydraulic Systems Initial Organizational Maintenance
TRAINING ACTIVITY: MTU 1012
LOCATION, UIC: NAMTRAU Whidbey Island, 66058

SOURCE: USN **STUDENT CATEGORY:** ACDU - TAR

CFY03		FY04		FY05		FY06		FY07		
OFF	ENL	OFF	ENL	OFF	ENL	OFF	ENL	OFF	ENL	
	60		60		60		60		60	ATIR
	54		54		54		54		54	Output
	2.4		2.4		2.4		2.4		2.4	AOB
	2.4		2.4		2.4		2.4		2.4	Chargeable

SOURCE: USN **STUDENT CATEGORY:** SELRES

CFY03		FY04		FY05		FY06		FY07		
OFF	ENL	OFF	ENL	OFF	ENL	OFF	ENL	OFF	ENL	
	2		2		2		2		2	ATIR
	2		2		2		2		2	Output
	0.1		0.1		0.1		0.1		0.1	AOB
	0.0		0.0		0.0		0.0		0.0	Chargeable

CIN, COURSE TITLE: D-602-1151, P-3C Electrical and Instrument Systems Career Organizational Maintenance
TRAINING ACTIVITY: MTU 1011
LOCATION, UIC: NAMTRAU Jacksonville, 66051

SOURCE: USN **STUDENT CATEGORY:** ACDU - TAR

CFY03		FY04		FY05		FY06		FY07		
OFF	ENL	OFF	ENL	OFF	ENL	OFF	ENL	OFF	ENL	
	25		25		25		25		25	ATIR
	22		22		22		22		22	Output
	1.5		1.5		1.5		1.5		1.5	AOB
	1.5		1.5		1.5		1.5		1.5	Chargeable

III.A.2.a. EXISTING COURSES

CIN, COURSE TITLE: E-602-1151, P-3C Electrical and Instrument Systems Career Organizational Maintenance
TRAINING ACTIVITY: MTU 1012
LOCATION, UIC: NAMTRAU Whidbey Island, 66058

SOURCE: USN **STUDENT CATEGORY:** ACDU - TAR

CFY03		FY04		FY05		FY06		FY07		
OFF	ENL	OFF	ENL	OFF	ENL	OFF	ENL	OFF	ENL	
	19		19		19		19		19	ATIR
	17		17		17		17		17	Output
	1.2		1.2		1.2		1.2		1.2	AOB
	1.2		1.2		1.2		1.2		1.2	Chargeable

CIN, COURSE TITLE: D-602-1161, P-3 Environmental Systems Organizational Maintenance
TRAINING ACTIVITY: MTU 1011
LOCATION, UIC: NAMTRAU Jacksonville, 66051

SOURCE: USN **STUDENT CATEGORY:** ACDU - TAR

CFY03		FY04		FY05		FY06		FY07		
OFF	ENL	OFF	ENL	OFF	ENL	OFF	ENL	OFF	ENL	
	19		19		19		19		19	ATIR
	17		17		17		17		17	Output
	1.1		1.1		1.1		1.1		1.1	AOB
	1.1		1.1		1.1		1.1		1.1	Chargeable

SOURCE: USN **STUDENT CATEGORY:** SELRES

CFY03		FY04		FY05		FY06		FY07		
OFF	ENL	OFF	ENL	OFF	ENL	OFF	ENL	OFF	ENL	
	1		1		1		1		1	ATIR
	1		1		1		1		1	Output
	0.1		0.1		0.1		0.1		0.1	AOB
	0.0		0.0		0.0		0.0		0.0	Chargeable

CIN, COURSE TITLE: E-602-1161, P-3 Environmental Systems Organizational Maintenance
TRAINING ACTIVITY: MTU 1012
LOCATION, UIC: NAMTRAU Whidbey Island, 66058

SOURCE: USN **STUDENT CATEGORY:** ACDU - TAR

CFY03		FY04		FY05		FY06		FY07		
OFF	ENL	OFF	ENL	OFF	ENL	OFF	ENL	OFF	ENL	
	17		17		17		17		17	ATIR
	15		15		15		15		15	Output
	1.0		1.0		1.0		1.0		1.0	AOB
	1.0		1.0		1.0		1.0		1.0	Chargeable

III.A.2.a. EXISTING COURSES

SOURCE: USN **STUDENT CATEGORY:** SELRES

CFY03		FY04		FY05		FY06		FY07		
OFF	ENL	OFF	ENL	OFF	ENL	OFF	ENL	OFF	ENL	
1		1		1		1		1		ATIR
1		1		1		1		1		Output
0.1		0.1		0.1		0.1		0.1		AOB
0.0		0.0		0.0		0.0		0.0		Chargeable

CIN, COURSE TITLE: D-646-1140, P-3 Armament Systems Integrated Organizational Maintenance
TRAINING ACTIVITY: MTU 1011
LOCATION, UIC: NAMTRAU Jacksonville, 66051

SOURCE: USN **STUDENT CATEGORY:** ACDU - TAR

CFY03		FY04		FY05		FY06		FY07		
OFF	ENL	OFF	ENL	OFF	ENL	OFF	ENL	OFF	ENL	
14		14		14		14		14		ATIR
13		13		13		13		13		Output
1.5		1.5		1.5		1.5		1.5		AOB
1.5		1.5		1.5		1.5		1.5		Chargeable

SOURCE: USN **STUDENT CATEGORY:** SELRES

CFY03		FY04		FY05		FY06		FY07		
OFF	ENL	OFF	ENL	OFF	ENL	OFF	ENL	OFF	ENL	
0		0		0		1		0		ATIR
0		0		0		1		0		Output
0.0		0.0		0.0		0.1		0.0		AOB
0.0		0.0		0.0		0.0		0.0		Chargeable

CIN, COURSE TITLE: E-646-1140, P-3 Armament Systems Integrated Organizational Maintenance
TRAINING ACTIVITY: MTU 1012
LOCATION, UIC: NAMTRAU Whidbey Island, 66058

SOURCE: USN **STUDENT CATEGORY:** ACDU - TAR

CFY03		FY04		FY05		FY06		FY07		
OFF	ENL	OFF	ENL	OFF	ENL	OFF	ENL	OFF	ENL	
14		14		14		14		14		ATIR
13		13		13		13		13		Output
1.6		1.6		1.6		1.6		1.6		AOB
1.6		1.6		1.6		1.6		1.6		Chargeable

III.A.2.a. EXISTING COURSES

SOURCE: USN **STUDENT CATEGORY:** SELRES

CFY03		FY04		FY05		FY06		FY07		
OFF	ENL	OFF	ENL	OFF	ENL	OFF	ENL	OFF	ENL	
0		1		0		1		0		ATIR
0		1		0		1		0		Output
0.0		0.1		0.0		0.1		0.0		AOB
0.0		0.0		0.0		0.0		0.0		Chargeable

CIN, COURSE TITLE: D-646-1144, P-3 Conventional Weapons Loading Refresher
TRAINING ACTIVITY: FASOTRAGRU DET
LOCATION, UIC: NAS Brunswick, 44408

SOURCE: USN **STUDENT CATEGORY:** ACDU - TAR

CFY03		FY04		FY05		FY06		FY07		
OFF	ENL	OFF	ENL	OFF	ENL	OFF	ENL	OFF	ENL	
79		79		79		79		79		ATIR
71		71		71		71		71		Output
1.0		1.0		1.0		1.0		1.0		AOB
1.0		1.0		1.0		1.0		1.0		Chargeable

SOURCE: USN **STUDENT CATEGORY:** SELRES

CFY03		FY04		FY05		FY06		FY07		
OFF	ENL	OFF	ENL	OFF	ENL	OFF	ENL	OFF	ENL	
4		4		4		4		4		ATIR
4		4		4		4		4		Output
0.1		0.1		0.1		0.1		0.1		AOB
0.0		0.0		0.0		0.0		0.0		Chargeable

TRAINING ACTIVITY: FASOTRAGRU DET
LOCATION, UIC: NAS Jacksonville, 43620

SOURCE: USN **STUDENT CATEGORY:** ACDU - TAR

CFY03		FY04		FY05		FY06		FY07		
OFF	ENL	OFF	ENL	OFF	ENL	OFF	ENL	OFF	ENL	
77		77		77		77		77		ATIR
69		69		69		69		69		Output
1.0		1.0		1.0		1.0		1.0		AOB
1.0		1.0		1.0		1.0		1.0		Chargeable

III.A.2.a. EXISTING COURSES

SOURCE: USN **STUDENT CATEGORY:** SELRES

CFY03		FY04		FY05		FY06		FY07		
OFF	ENL	OFF	ENL	OFF	ENL	OFF	ENL	OFF	ENL	
	4		4		4		4		4	ATIR
	4		4		4		4		4	Output
	0.1		0.1		0.1		0.1		0.1	AOB
	0.0		0.0		0.0		0.0		0.0	Chargeable

CIN, COURSE TITLE: A-100-0072, Miniature Electronics Repair
TRAINING ACTIVITY: Fleet Training Center Mayport
LOCATION, UIC: NS Mayport, 43015

SOURCE: USN **STUDENT CATEGORY:** ACDU - TAR

CFY03		FY04		FY05		FY06		FY07		
OFF	ENL	OFF	ENL	OFF	ENL	OFF	ENL	OFF	ENL	
	7		7		7		7		7	ATIR
	6		6		6		6		6	Output
	0.5		0.5		0.5		0.5		0.5	AOB
	0.5		0.5		0.5		0.5		0.5	Chargeable

TRAINING ACTIVITY: FASOTRAGRUDET
LOCATION, UIC: NAS Whidbey Island, 0345A

SOURCE: USN **STUDENT CATEGORY:** ACDU - TAR

CFY03		FY04		FY05		FY06		FY07		
OFF	ENL	OFF	ENL	OFF	ENL	OFF	ENL	OFF	ENL	
	1		1		1		1		1	ATIR
	1		1		1		1		1	Output
	0.1		0.1		0.1		0.1		0.1	AOB
	0.1		0.1		0.1		0.1		0.1	Chargeable

CIN, COURSE TITLE: D-102-6036, Doppler Radar Equipment Intermediate Maintenance
TRAINING ACTIVITY: MTU 1011
LOCATION, UIC: NAMTRAU Jacksonville, 66051

SOURCE: USN **STUDENT CATEGORY:** ACDU - TAR

CFY03		FY04		FY05		FY06		FY07		
OFF	ENL	OFF	ENL	OFF	ENL	OFF	ENL	OFF	ENL	
	1		1		1		1		1	ATIR
	1		1		1		1		1	Output
	0.1		0.1		0.1		0.1		0.1	AOB
	0.1		0.1		0.1		0.1		0.1	Chargeable

III.A.2.a. EXISTING COURSES

SOURCE: USN **STUDENT CATEGORY:** SELRES

CFY03		FY04		FY05		FY06		FY07		
OFF	ENL	OFF	ENL	OFF	ENL	OFF	ENL	OFF	ENL	
	0		0		1		0		0	ATIR
	0		0		1		0		0	Output
	0.0		0.0		0.1		0.0		0.0	AOB
	0.0		0.0		0.0		0.0		0.0	Chargeable

CIN, COURSE TITLE: D-102-6039, Electronics Identification Equipment Intermediate Maintenance
TRAINING ACTIVITY: MTU 1007
LOCATION, UIC: NAMTRAU Oceana, 66045

SOURCE: USN **STUDENT CATEGORY:** ACDU - TAR

CFY03		FY04		FY05		FY06		FY07		
OFF	ENL	OFF	ENL	OFF	ENL	OFF	ENL	OFF	ENL	
	3		3		3		3		3	ATIR
	3		3		3		3		3	Output
	0.5		0.5		0.5		0.5		0.5	AOB
	0.5		0.5		0.5		0.5		0.5	Chargeable

TRAINING ACTIVITY: MTU 1011
LOCATION, UIC: NAMTRAU Jacksonville, 66051

SOURCE: USN **STUDENT CATEGORY:** ACDU - TAR

CFY03		FY04		FY05		FY06		FY07		
OFF	ENL	OFF	ENL	OFF	ENL	OFF	ENL	OFF	ENL	
	7		7		7		7		7	ATIR
	6		6		6		6		6	Output
	1.2		1.2		1.2		1.2		1.2	AOB
	1.2		1.2		1.2		1.2		1.2	Chargeable

CIN, COURSE TITLE: E-102-6039, Electronics Identification Equipment Intermediate Maintenance
TRAINING ACTIVITY: MTU 1038
LOCATION, UIC: NAMTRAU Lemoore, 39472

SOURCE: USN **STUDENT CATEGORY:** ACDU - TAR

CFY03		FY04		FY05		FY06		FY07		
OFF	ENL	OFF	ENL	OFF	ENL	OFF	ENL	OFF	ENL	
	2		2		2		2		2	ATIR
	2		2		2		2		2	Output
	0.3		0.3		0.3		0.3		0.3	AOB
	0.3		0.3		0.3		0.3		0.3	Chargeable

III.A.2.a. EXISTING COURSES

CIN, COURSE TITLE: D-102-6097, AN/APS-115B Radar Systems Intermediate Maintenance
TRAINING ACTIVITY: MTU 1011
LOCATION, UIC: NAMTRAU Jacksonville, 66051

SOURCE: USN **STUDENT CATEGORY:** ACDU - TAR

CFY03		FY04		FY05		FY06		FY07		
OFF	ENL	OFF	ENL	OFF	ENL	OFF	ENL	OFF	ENL	
	6		6		6		6		6	ATIR
	5		5		5		5		5	Output
	0.7		0.7		0.7		0.7		0.7	AOB
	0.7		0.7		0.7		0.7		0.7	Chargeable

CIN, COURSE TITLE: E-102-6097, AN/APS-115B Radar Systems Intermediate Maintenance
TRAINING ACTIVITY: MTU 1012
LOCATION, UIC: NAMTRAU Whidbey Island, 66058

SOURCE: USN **STUDENT CATEGORY:** ACDU - TAR

CFY03		FY04		FY05		FY06		FY07		
OFF	ENL	OFF	ENL	OFF	ENL	OFF	ENL	OFF	ENL	
	3		3		3		3		3	ATIR
	3		3		3		3		3	Output
	0.3		0.3		0.3		0.3		0.3	AOB
	0.3		0.3		0.3		0.3		0.3	Chargeable

SOURCE: USN **STUDENT CATEGORY:** SELRES

CFY03		FY04		FY05		FY06		FY07		
OFF	ENL	OFF	ENL	OFF	ENL	OFF	ENL	OFF	ENL	
	1		0		0		0		0	ATIR
	1		0		0		0		0	Output
	0.1		0.0		0.0		0.0		0.0	AOB
	0.0		0.0		0.0		0.0		0.0	Chargeable

CIN, COURSE TITLE: D-102-6109, Radar Altimeter Equipment Intermediate Maintenance
TRAINING ACTIVITY: MTU 1011
LOCATION, UIC: NAMTRAU Jacksonville, 66051

SOURCE: USN **STUDENT CATEGORY:** ACDU - TAR

CFY03		FY04		FY05		FY06		FY07		
OFF	ENL	OFF	ENL	OFF	ENL	OFF	ENL	OFF	ENL	
	3		3		3		3		3	ATIR
	3		3		3		3		3	Output
	0.2		0.2		0.2		0.2		0.2	AOB
	0.2		0.2		0.2		0.2		0.2	Chargeable

III.A.2.a. EXISTING COURSES

CIN, COURSE TITLE: E-102-6109, Radar Altimeter Equipment Intermediate Maintenance
TRAINING ACTIVITY: MTU 1036
LOCATION, UIC: NAMTRAU North Island, 39476

SOURCE: USN **STUDENT CATEGORY:** ACDU - TAR

CFY03		FY04		FY05		FY06		FY07		
OFF	ENL	OFF	ENL	OFF	ENL	OFF	ENL	OFF	ENL	
	4		4		4		4		4	ATIR
	4		4		4		4		4	Output
	0.3		0.3		0.3		0.3		0.3	AOB
	0.3		0.3		0.3		0.3		0.3	Chargeable

SOURCE: USN **STUDENT CATEGORY:** SELRES

CFY03		FY04		FY05		FY06		FY07		
OFF	ENL	OFF	ENL	OFF	ENL	OFF	ENL	OFF	ENL	
	1		1		1		1		1	ATIR
	1		1		1		1		1	Output
	0.1		0.1		0.1		0.1		0.1	AOB
	0.0		0.0		0.0		0.0		0.0	Chargeable

CIN, COURSE TITLE: D-102-6113, TACAN Radio Navigation Equipment Intermediate Maintenance
TRAINING ACTIVITY: MTU 1007
LOCATION, UIC: NAMTRAU Oceana, 66045

SOURCE: USN **STUDENT CATEGORY:** ACDU - TAR

CFY03		FY04		FY05		FY06		FY07		
OFF	ENL	OFF	ENL	OFF	ENL	OFF	ENL	OFF	ENL	
	4		4		4		4		4	ATIR
	4		4		4		4		4	Output
	0.4		0.4		0.4		0.4		0.4	AOB
	0.4		0.4		0.4		0.4		0.4	Chargeable

SOURCE: USN **STUDENT CATEGORY:** SELRES

CFY03		FY04		FY05		FY06		FY07		
OFF	ENL	OFF	ENL	OFF	ENL	OFF	ENL	OFF	ENL	
	0		0		0		0		1	ATIR
	0		0		0		0		1	Output
	0.0		0.0		0.0		0.0		0.1	AOB
	0.0		0.0		0.0		0.0		0.0	Chargeable

III.A.2.a. EXISTING COURSES

CIN, COURSE TITLE: E-102-6113, TACAN Radio Navigation Equipment Intermediate Maintenance
TRAINING ACTIVITY: MTU 1038
LOCATION, UIC: NAMTRAU Lemoore, 39472

SOURCE: USN **STUDENT CATEGORY:** ACDU - TAR

CFY03		FY04		FY05		FY06		FY07		
OFF	ENL	OFF	ENL	OFF	ENL	OFF	ENL	OFF	ENL	
	8		8		8		8		8	ATIR
	7		7		7		7		7	Output
	0.8		0.8		0.8		0.8		0.8	AOB
	0.8		0.8		0.8		0.8		0.8	Chargeable

SOURCE: USN **STUDENT CATEGORY:** SELRES

CFY03		FY04		FY05		FY06		FY07		
OFF	ENL	OFF	ENL	OFF	ENL	OFF	ENL	OFF	ENL	
	1		1		1		1		1	ATIR
	1		1		1		1		1	Output
	0.1		0.1		0.1		0.1		0.1	AOB
	0.0		0.0		0.0		0.0		0.0	Chargeable

CIN, COURSE TITLE: D-102-6121, Infrared Detection System Intermediate Maintenance
TRAINING ACTIVITY: MTU 1011
LOCATION, UIC: NAMTRAU Jacksonville, 66051

SOURCE: USN **STUDENT CATEGORY:** ACDU - TAR

CFY03		FY04		FY05		FY06		FY07		
OFF	ENL	OFF	ENL	OFF	ENL	OFF	ENL	OFF	ENL	
	3		3		3		3		3	ATIR
	3		3		3		3		3	Output
	0.7		0.7		0.7		0.7		0.7	AOB
	0.7		0.7		0.7		0.7		0.7	Chargeable

SOURCE: USN **STUDENT CATEGORY:** SELRES

CFY03		FY04		FY05		FY06		FY07		
OFF	ENL	OFF	ENL	OFF	ENL	OFF	ENL	OFF	ENL	
	0		0		0		0		1	ATIR
	0		0		0		0		1	Output
	0.0		0.0		0.0		0.0		0.3	AOB
	0.0		0.0		0.0		0.0		0.0	Chargeable

III.A.2.a. EXISTING COURSES

CIN, COURSE TITLE: E-102-6121, Infrared Detection System Intermediate Maintenance
TRAINING ACTIVITY: MTU 1012
LOCATION, UIC: NAMTRAU Whidbey Island, 66058

SOURCE: USN **STUDENT CATEGORY:** ACDU - TAR

CFY03		FY04		FY05		FY06		FY07		
OFF	ENL	OFF	ENL	OFF	ENL	OFF	ENL	OFF	ENL	
	3		3		3		3		3	ATIR
	3		3		3		3		3	Output
	0.7		0.7		0.7		0.7		0.7	AOB
	0.7		0.7		0.7		0.7		0.7	Chargeable

SOURCE: USN **STUDENT CATEGORY:** SELRES

CFY03		FY04		FY05		FY06		FY07		
OFF	ENL	OFF	ENL	OFF	ENL	OFF	ENL	OFF	ENL	
	0		0		0		0		0	ATIR
	0		0		0		0		0	Output
	0.0		0.0		0.0		0.0		0.0	AOB
	0.0		0.0		0.0		0.0		0.0	Chargeable

CIN, COURSE TITLE: D-102-6122, Cryptographic Equipment Intermediate Maintenance
TRAINING ACTIVITY: MTU 1007
LOCATION, UIC: NAMTRAU Oceana, 66045

SOURCE: USN **STUDENT CATEGORY:** ACDU - TAR

CFY03		FY04		FY05		FY06		FY07		
OFF	ENL	OFF	ENL	OFF	ENL	OFF	ENL	OFF	ENL	
	4		4		4		4		4	ATIR
	4		4		4		4		4	Output
	0.2		0.2		0.2		0.2		0.2	AOB
	0.2		0.2		0.2		0.2		0.2	Chargeable

CIN, COURSE TITLE: E-102-6122, Cryptographic Equipment Intermediate Maintenance
TRAINING ACTIVITY: MTU 1038
LOCATION, UIC: NAMTRAU Lemoore, 39472

SOURCE: USN **STUDENT CATEGORY:** ACDU - TAR

CFY03		FY04		FY05		FY06		FY07		
OFF	ENL	OFF	ENL	OFF	ENL	OFF	ENL	OFF	ENL	
	1		1		1		1		1	ATIR
	1		1		1		1		1	Output
	0.1		0.1		0.1		0.1		0.1	AOB
	0.1		0.1		0.1		0.1		0.1	Chargeable

III.A.2.a. EXISTING COURSES

CIN, COURSE TITLE: D-102-6152, UHF Communications Equipment Intermediate Maintenance
TRAINING ACTIVITY: MTU 1007
LOCATION, UIC: NAMTRAU Oceana, 66045

SOURCE: USN **STUDENT CATEGORY:** ACDU - TAR

CFY03		FY04		FY05		FY06		FY07		
OFF	ENL	OFF	ENL	OFF	ENL	OFF	ENL	OFF	ENL	
	5		5		5		5		5	ATIR
	5		5		5		5		5	Output
	0.4		0.4		0.4		0.4		0.4	AOB
	0.4		0.4		0.4		0.4		0.4	Chargeable

CIN, COURSE TITLE: E-102-6152, UHF Communications Equipment Intermediate Maintenance
TRAINING ACTIVITY: MTU 1038
LOCATION, UIC: NAMTRAU Lemoore, 39472

SOURCE: USN **STUDENT CATEGORY:** ACDU - TAR

CFY03		FY04		FY05		FY06		FY07		
OFF	ENL	OFF	ENL	OFF	ENL	OFF	ENL	OFF	ENL	
	5		5		5		5		5	ATIR
	5		5		5		5		5	Output
	0.4		0.4		0.4		0.4		0.4	AOB
	0.4		0.4		0.4		0.4		0.4	Chargeable

SOURCE: USN **STUDENT CATEGORY:** SELRES

CFY03		FY04		FY05		FY06		FY07		
OFF	ENL	OFF	ENL	OFF	ENL	OFF	ENL	OFF	ENL	
	0		0		0		1		0	ATIR
	0		0		0		1		0	Output
	0.0		0.0		0.0		0.1		0.0	AOB
	0.0		0.0		0.0		0.0		0.0	Chargeable

CIN, COURSE TITLE: D-102-6171, P-3 Peculiar Communications Equipment Intermediate Maintenance
TRAINING ACTIVITY: MTU 1011
LOCATION, UIC: NAMTRAU Jacksonville, 66051

SOURCE: USN **STUDENT CATEGORY:** ACDU - TAR

CFY03		FY04		FY05		FY06		FY07		
OFF	ENL	OFF	ENL	OFF	ENL	OFF	ENL	OFF	ENL	
	14		14		14		14		14	ATIR
	13		13		13		13		13	Output
	1.9		1.9		1.9		1.9		1.9	AOB
	1.9		1.9		1.9		1.9		1.9	Chargeable

III.A.2.a. EXISTING COURSES

SOURCE: USN **STUDENT CATEGORY:** SELRES

CFY03		FY04		FY05		FY06		FY07		
OFF	ENL	OFF	ENL	OFF	ENL	OFF	ENL	OFF	ENL	
	0		0		0		0		1	ATIR
	0		0		0		0		1	Output
	0.0		0.0		0.0		0.0		0.1	AOB
	0.0		0.0		0.0		0.0		0.0	Chargeable

CIN, COURSE TITLE: E-102-6171, P-3 Peculiar Communications Equipment Intermediate Maintenance
TRAINING ACTIVITY: MTU 1012
LOCATION, UIC: NAMTRAU Whidbey Island, 66058

SOURCE: USN **STUDENT CATEGORY:** ACDU - TAR

CFY03		FY04		FY05		FY06		FY07		
OFF	ENL	OFF	ENL	OFF	ENL	OFF	ENL	OFF	ENL	
	4		4		4		4		4	ATIR
	4		4		4		4		4	Output
	0.5		0.5		0.5		0.5		0.5	AOB
	0.5		0.5		0.5		0.5		0.5	Chargeable

SOURCE: USN **STUDENT CATEGORY:** SELRES

CFY03		FY04		FY05		FY06		FY07		
OFF	ENL	OFF	ENL	OFF	ENL	OFF	ENL	OFF	ENL	
	0		0		0		1		0	ATIR
	0		0		0		1		0	Output
	0.0		0.0		0.0		0.1		0.0	AOB
	0.0		0.0		0.0		0.0		0.0	Chargeable

CIN, COURSE TITLE: D-102-6172, P-3 Peculiar Navigation Equipment Intermediate Maintenance
TRAINING ACTIVITY: MTU 1011
LOCATION, UIC: NAMTRAU Jacksonville, 66051

SOURCE: USN **STUDENT CATEGORY:** ACDU - TAR

CFY03		FY04		FY05		FY06		FY07		
OFF	ENL	OFF	ENL	OFF	ENL	OFF	ENL	OFF	ENL	
	6		6		6		6		6	ATIR
	5		5		5		5		5	Output
	0.6		0.6		0.6		0.6		0.6	AOB
	0.6		0.6		0.6		0.6		0.6	Chargeable

III.A.2.a. EXISTING COURSES

CIN, COURSE TITLE: E-102-6172, P-3 Peculiar Navigation Equipment Intermediate Maintenance
TRAINING ACTIVITY: MTU 1012
LOCATION, UIC: NAMTRAU Whidbey Island, 66058

SOURCE: USN **STUDENT CATEGORY:** ACDU - TAR

CFY03		FY04		FY05		FY06		FY07		
OFF	ENL	OFF	ENL	OFF	ENL	OFF	ENL	OFF	ENL	
	2		2		2		2		2	ATIR
	2		2		2		2		2	Output
	0.2		0.2		0.2		0.2		0.2	AOB
	0.2		0.2		0.2		0.2		0.2	Chargeable

SOURCE: USN **STUDENT CATEGORY:** SELRES

CFY03		FY04		FY05		FY06		FY07		
OFF	ENL	OFF	ENL	OFF	ENL	OFF	ENL	OFF	ENL	
	0		0		0		1		0	ATIR
	0		0		0		1		0	Output
	0.0		0.0		0.0		0.1		0.0	AOB
	0.0		0.0		0.0		0.0		0.0	Chargeable

CIN, COURSE TITLE: D-130-9057, P-3 Magnetic Anomaly Detection (MAD) System Intermediate Maintenance
TRAINING ACTIVITY: MTU 1011
LOCATION, UIC: NAMTRAU Jacksonville, 66051

SOURCE: USN **STUDENT CATEGORY:** ACDU - TAR

CFY03		FY04		FY05		FY06		FY07		
OFF	ENL	OFF	ENL	OFF	ENL	OFF	ENL	OFF	ENL	
	3		3		3		3		3	ATIR
	3		3		3		3		3	Output
	0.3		0.3		0.3		0.3		0.3	AOB
	0.3		0.3		0.3		0.3		0.3	Chargeable

CIN, COURSE TITLE: E-130-9057, P-3 Magnetic Anomaly Detection (MAD) System Intermediate Maintenance
TRAINING ACTIVITY: MTU 1012
LOCATION, UIC: NAMTRAU Whidbey Island, 66058

SOURCE: USN **STUDENT CATEGORY:** ACDU - TAR

CFY03		FY04		FY05		FY06		FY07		
OFF	ENL	OFF	ENL	OFF	ENL	OFF	ENL	OFF	ENL	
	1		1		1		1		1	ATIR
	1		1		1		1		1	Output
	0.1		0.1		0.1		0.1		0.1	AOB
	0.1		0.1		0.1		0.1		0.1	Chargeable

III.A.2.a. EXISTING COURSES

CIN, COURSE TITLE: D-130-9072, P-3 Aircraft Sonobuoy Receiving, Recording Reference System Intermediate Maintenance
TRAINING ACTIVITY: MTU 1011
LOCATION, UIC: NAMTRAU Jacksonville, 66051

SOURCE: USN **STUDENT CATEGORY:** ACDU - TAR

CFY03		FY04		FY05		FY06		FY07		
OFF	ENL	OFF	ENL	OFF	ENL	OFF	ENL	OFF	ENL	
3		3		3		3		3		ATIR
3		3		3		3		3		Output
0.2		0.2		0.2		0.2		0.2		AOB
0.2		0.2		0.2		0.2		0.2		Chargeable

SOURCE: USN **STUDENT CATEGORY:** SELRES

CFY03		FY04		FY05		FY06		FY07		
OFF	ENL	OFF	ENL	OFF	ENL	OFF	ENL	OFF	ENL	
1		0		0		0		0		ATIR
1		0		0		0		0		Output
0.1		0.0		0.0		0.0		0.0		AOB
0.0		0.0		0.0		0.0		0.0		Chargeable

CIN, COURSE TITLE: E-130-9072, P-3 Aircraft Sonobuoy Receiving, Recording Reference System Intermediate Maintenance
TRAINING ACTIVITY: MTU 1012
LOCATION, UIC: NAMTRAU Whidbey Island, 66058

SOURCE: USN **STUDENT CATEGORY:** ACDU - TAR

CFY03		FY04		FY05		FY06		FY07		
OFF	ENL	OFF	ENL	OFF	ENL	OFF	ENL	OFF	ENL	
2		2		2		2		2		ATIR
2		2		2		2		2		Output
0.2		0.2		0.2		0.2		0.2		AOB
0.2		0.2		0.2		0.2		0.2		Chargeable

SOURCE: USN **STUDENT CATEGORY:** SELRES

CFY03		FY04		FY05		FY06		FY07		
OFF	ENL	OFF	ENL	OFF	ENL	OFF	ENL	OFF	ENL	
0		1		0		0		0		ATIR
0		1		0		0		0		Output
0.0		0.1		0.0		0.0		0.0		AOB
0.0		0.0		0.0		0.0		0.0		Chargeable

III.A.2.a. EXISTING COURSES

CIN, COURSE TITLE: D-198-6007, P-3 AN/USM-449A (V) Test Set Operator Intermediate Maintenance
TRAINING ACTIVITY: MTU 1011
LOCATION, UIC: NAMTRAU Jacksonville, 66051

SOURCE: USN **STUDENT CATEGORY:** ACDU - TAR

CFY03		FY04		FY05		FY06		FY07		
OFF	ENL	OFF	ENL	OFF	ENL	OFF	ENL	OFF	ENL	
	5		5		5		5		5	ATIR
	5		5		5		5		5	Output
	0.3		0.3		0.3		0.3		0.3	AOB
	0.3		0.3		0.3		0.3		0.3	Chargeable

SOURCE: USN **STUDENT CATEGORY:** SELRES

CFY03		FY04		FY05		FY06		FY07		
OFF	ENL	OFF	ENL	OFF	ENL	OFF	ENL	OFF	ENL	
	0		0		0		1		0	ATIR
	0		0		0		1		0	Output
	0.0		0.0		0.0		0.1		0.0	AOB
	0.0		0.0		0.0		0.0		0.0	Chargeable

CIN, COURSE TITLE: D-198-6009, P-3 AN/USM-449A (V) Automatic Test System Maintenance Technician
TRAINING ACTIVITY: MTU 1011
LOCATION, UIC: NAMTRAU Jacksonville, 66051

SOURCE: USN **STUDENT CATEGORY:** ACDU - TAR

CFY03		FY04		FY05		FY06		FY07		
OFF	ENL	OFF	ENL	OFF	ENL	OFF	ENL	OFF	ENL	
	9		9		9		9		9	ATIR
	8		8		8		8		8	Output
	2.3		2.3		2.3		2.3		2.3	AOB
	2.3		2.3		2.3		2.3		2.3	Chargeable

CIN, COURSE TITLE: D-601-3001, T-56 Engine First Degree Intermediate Maintenance
TRAINING ACTIVITY: MTU 1011
LOCATION, UIC: NAMTRAU Jacksonville, 66051

SOURCE: USN **STUDENT CATEGORY:** ACDU - TAR

CFY03		FY04		FY05		FY06		FY07		
OFF	ENL	OFF	ENL	OFF	ENL	OFF	ENL	OFF	ENL	
	36		36		36		36		36	ATIR
	32		32		32		32		32	Output
	5.4		5.4		5.4		5.4		5.4	AOB
	5.4		5.4		5.4		5.4		5.4	Chargeable

III.A.2.a. EXISTING COURSES

SOURCE: USN **STUDENT CATEGORY:** SELRES

CFY03		FY04		FY05		FY06		FY07		
OFF	ENL	OFF	ENL	OFF	ENL	OFF	ENL	OFF	ENL	
0		0		0		0		1		ATIR
0		0		0		0		1		Output
0.0		0.0		0.0		0.0		0.2		AOB
0.0		0.0		0.0		0.0		0.0		Chargeable

CIN, COURSE TITLE: E-601-3001, T-56 Engine First Degree Intermediate Maintenance
TRAINING ACTIVITY: MTU 1012
LOCATION, UIC: NAMTRAU Whidbey Island, 66058

SOURCE: USN **STUDENT CATEGORY:** ACDU - TAR

CFY03		FY04		FY05		FY06		FY07		
OFF	ENL	OFF	ENL	OFF	ENL	OFF	ENL	OFF	ENL	
20		20		20		20		20		ATIR
18		18		18		18		18		Output
3.0		3.0		3.0		3.0		3.0		AOB
3.0		3.0		3.0		3.0		3.0		Chargeable

SOURCE: USN **STUDENT CATEGORY:** SELRES

CFY03		FY04		FY05		FY06		FY07		
OFF	ENL	OFF	ENL	OFF	ENL	OFF	ENL	OFF	ENL	
0		1		0		1		0		ATIR
0		1		0		1		0		Output
0.0		0.2		0.0		0.2		0.0		AOB
0.0		0.0		0.0		0.0		0.0		Chargeable

CIN, COURSE TITLE: D-602-4008, Hydraulic Components Intermediate Maintenance
TRAINING ACTIVITY: MTU 1007
LOCATION, UIC: NAMTRAU Oceana, 66045

SOURCE: USN **STUDENT CATEGORY:** ACDU - TAR

CFY03		FY04		FY05		FY06		FY07		
OFF	ENL	OFF	ENL	OFF	ENL	OFF	ENL	OFF	ENL	
3		3		3		3		3		ATIR
3		3		3		3		3		Output
0.2		0.2		0.2		0.2		0.2		AOB
0.2		0.2		0.2		0.2		0.2		Chargeable

III.A.2.a. EXISTING COURSES

CIN, COURSE TITLE: E-602-4008, Hydraulic Components Intermediate Maintenance
TRAINING ACTIVITY: MTU 1038
LOCATION, UIC: NAMTRAU Lemoore, 39472

SOURCE: USN **STUDENT CATEGORY:** ACDU - TAR

CFY03		FY04		FY05		FY06		FY07		
OFF	ENL	OFF	ENL	OFF	ENL	OFF	ENL	OFF	ENL	
	4		4		4		4		4	ATIR
	4		4		4		4		4	Output
	0.3		0.3		0.3		0.3		0.3	AOB
	0.3		0.3		0.3		0.3		0.3	Chargeable

SOURCE: USN **STUDENT CATEGORY:** SELRES

CFY03		FY04		FY05		FY06		FY07		
OFF	ENL	OFF	ENL	OFF	ENL	OFF	ENL	OFF	ENL	
	0		1		0		0		1	ATIR
	0		1		0		0		1	Output
	0.0		0.1		0.0		0.0		0.1	AOB
	0.0		0.0		0.0		0.0		0.0	Chargeable

CIN, COURSE TITLE: D-602-5032, P-3 Automatic Flight Control System Intermediate Maintenance
TRAINING ACTIVITY: MTU 1011
LOCATION, UIC: NAMTRAU Jacksonville, 66051

SOURCE: USN **STUDENT CATEGORY:** ACDU - TAR

CFY03		FY04		FY05		FY06		FY07		
OFF	ENL	OFF	ENL	OFF	ENL	OFF	ENL	OFF	ENL	
	6		6		6		6		6	ATIR
	5		5		5		5		5	Output
	0.5		0.5		0.5		0.5		0.5	AOB
	0.5		0.5		0.5		0.5		0.5	Chargeable

SOURCE: USN **STUDENT CATEGORY:** SELRES

CFY03		FY04		FY05		FY06		FY07		
OFF	ENL	OFF	ENL	OFF	ENL	OFF	ENL	OFF	ENL	
	0		0		0		0		0	ATIR
	0		0		0		0		0	Output
	0.0		0.0		0.0		0.0		0.0	AOB
	0.0		0.0		0.0		0.0		0.0	Chargeable

III.A.2.a. EXISTING COURSES

CIN, COURSE TITLE: E-602-5032, P-3 Automatic Flight Control System Intermediate Maintenance
TRAINING ACTIVITY: MTU 1012
LOCATION, UIC: NAMTRAU Whidbey Island, 66058

SOURCE: USN **STUDENT CATEGORY:** ACDU - TAR

CFY03		FY04		FY05		FY06		FY07		
OFF	ENL	OFF	ENL	OFF	ENL	OFF	ENL	OFF	ENL	
	4		4		4		4		4	ATIR
	4		4		4		4		4	Output
	0.3		0.3		0.3		0.3		0.3	AOB
	0.3		0.3		0.3		0.3		0.3	Chargeable

SOURCE: USN **STUDENT CATEGORY:** SELRES

CFY03		FY04		FY05		FY06		FY07		
OFF	ENL	OFF	ENL	OFF	ENL	OFF	ENL	OFF	ENL	
	0		0		0		0		0	ATIR
	0		0		0		0		0	Output
	0.0		0.0		0.0		0.0		0.0	AOB
	0.0		0.0		0.0		0.0		0.0	Chargeable

CIN, COURSE TITLE: D-602-5062, Aircraft Sealed Instrument Intermediate Repair
TRAINING ACTIVITY: MTU 1011
LOCATION, UIC: NAMTRAU Jacksonville, 66051

SOURCE: USN **STUDENT CATEGORY:** ACDU - TAR

CFY03		FY04		FY05		FY06		FY07		
OFF	ENL	OFF	ENL	OFF	ENL	OFF	ENL	OFF	ENL	
	8		8		8		8		8	ATIR
	7		7		7		7		7	Output
	0.9		0.9		0.9		0.9		0.9	AOB
	0.9		0.9		0.9		0.9		0.9	Chargeable

CIN, COURSE TITLE: E-602-5062, Aircraft Sealed Instrument Intermediate Repair
TRAINING ACTIVITY: MTU 1025
LOCATION, UIC: NAMTRAGRU DET MCAS Miramar, 66064

SOURCE: USN **STUDENT CATEGORY:** ACDU - TAR

CFY03		FY04		FY05		FY06		FY07		
OFF	ENL	OFF	ENL	OFF	ENL	OFF	ENL	OFF	ENL	
	4		4		4		4		4	ATIR
	4		4		4		4		4	Output
	0.5		0.5		0.5		0.5		0.5	AOB
	0.5		0.5		0.5		0.5		0.5	Chargeable

III.A.2.a. EXISTING COURSES

SOURCE: USN **STUDENT CATEGORY:** SELRES

CFY03		FY04		FY05		FY06		FY07		
OFF	ENL	OFF	ENL	OFF	ENL	OFF	ENL	OFF	ENL	
	0		0		0		0		0	ATIR
	0		0		0		0		0	Output
	0.0		0.0		0.0		0.0		0.0	AOB
	0.0		0.0		0.0		0.0		0.0	Chargeable

CIN, COURSE TITLE: D-603-4007, Airframes Intermediate Maintenance
TRAINING ACTIVITY: MTU 1039
LOCATION, UIC: NAMTRAU Oceana, 66045

SOURCE: USN **STUDENT CATEGORY:** ACDU - TAR

CFY03		FY04		FY05		FY06		FY07		
OFF	ENL	OFF	ENL	OFF	ENL	OFF	ENL	OFF	ENL	
	13		13		13		13		13	ATIR
	12		12		12		12		12	Output
	1.0		1.0		1.0		1.0		1.0	AOB
	1.0		1.0		1.0		1.0		1.0	Chargeable

CIN, COURSE TITLE: E-603-4007, Airframes Intermediate Maintenance
TRAINING ACTIVITY: MTU 1038
LOCATION, UIC: NAMTRAU Lemoore, 39472

SOURCE: USN **STUDENT CATEGORY:** ACDU - TAR

CFY03		FY04		FY05		FY06		FY07		
OFF	ENL	OFF	ENL	OFF	ENL	OFF	ENL	OFF	ENL	
	9		9		9		9		9	ATIR
	8		8		8		8		8	Output
	0.7		0.7		0.7		0.7		0.7	AOB
	0.7		0.7		0.7		0.7		0.7	Chargeable

CIN, COURSE TITLE: D-646-7001, Strike Armament Systems Intermediate Maintenance
TRAINING ACTIVITY: NAMTRA UNIT
LOCATION, UIC: NS Norfolk, 44680

SOURCE: USN **STUDENT CATEGORY:** ACDU - TAR

CFY03		FY04		FY05		FY06		FY07		
OFF	ENL	OFF	ENL	OFF	ENL	OFF	ENL	OFF	ENL	
	8		8		8		8		8	ATIR
	7		7		7		7		7	Output
	1.4		1.4		1.4		1.4		1.4	AOB
	1.4		1.4		1.4		1.4		1.4	Chargeable

III.A.2.a. EXISTING COURSES

CIN, COURSE TITLE: E-646-7001, Strike Armament Systems Intermediate Maintenance
TRAINING ACTIVITY: MTU 1036
LOCATION, UIC: NAMTRAU North Island, 39476

SOURCE: USN **STUDENT CATEGORY:** ACDU - TAR

CFY03		FY04		FY05		FY06		FY07		
OFF	ENL	OFF	ENL	OFF	ENL	OFF	ENL	OFF	ENL	
	5		5		5		5		5	ATIR
	5		5		5		5		5	Output
	0.8		0.8		0.8		0.8		0.8	AOB
	0.8		0.8		0.8		0.8		0.8	Chargeable

SOURCE: USN **STUDENT CATEGORY:** SELRES

CFY03		FY04		FY05		FY06		FY07		
OFF	ENL	OFF	ENL	OFF	ENL	OFF	ENL	OFF	ENL	
	0		1		0		1		0	ATIR
	0		1		0		1		0	Output
	0.0		0.2		0.0		0.2		0.0	AOB
	0.0		0.0		0.0		0.0		0.0	Chargeable

CIN, COURSE TITLE: R-050-6124, P-3C Flight Crew Ordnance
TRAINING ACTIVITY: Reserve ASW Training Center
LOCATION, UIC: NAS Willow Grove, PA, 44637

SOURCE: USN **STUDENT CATEGORY:** ACDU - TAR

CFY03		FY04		FY05		FY06		FY07		
OFF	ENL	OFF	ENL	OFF	ENL	OFF	ENL	OFF	ENL	
	8		8		8		8		8	ATIR
	6		6		6		6		6	Output
	0.2		0.2		0.2		0.2		0.2	AOB
	0.2		0.2		0.2		0.2		0.2	Chargeable

SOURCE: USN **STUDENT CATEGORY:** SELRES

CFY03		FY04		FY05		FY06		FY07		
OFF	ENL	OFF	ENL	OFF	ENL	OFF	ENL	OFF	ENL	
	7		7		7		7		7	ATIR
	7		7		7		7		7	Output
	0.2		0.2		0.2		0.2		0.2	AOB
	0.0		0.0		0.0		0.0		0.0	Chargeable

III.A.2.c. UNIQUE COURSES

CIN, COURSE TITLE: D-102-6719, P-3C Aircraft Improvement Program Weapons System Organizational Maintenance
TRAINING ACTIVITY: MTU 1011
LOCATION, UIC: NAMTRAU Jacksonville, 66051

SOURCE: USN **STUDENT CATEGORY:** ACDU - TAR

CFY03		FY04		FY05		FY06		FY07		
OFF	ENL	OFF	ENL	OFF	ENL	OFF	ENL	OFF	ENL	
	28		28		28		28		28	ATIR
	25		25		25		25		25	Output
	2.9		2.9		2.9		2.9		2.9	AOB
	2.9		2.9		2.9		2.9		2.9	Chargeable

SOURCE: USN **STUDENT CATEGORY:** SELRES

CFY03		FY04		FY05		FY06		FY07		
OFF	ENL	OFF	ENL	OFF	ENL	OFF	ENL	OFF	ENL	
	0		1		0		1		0	ATIR
	0		1		0		1		0	Output
	0.0		0.1		0.0		0.1		0.0	AOB
	0.0		0.0		0.0		0.0		0.0	Chargeable

PART IV - TRAINING LOGISTICS SUPPORT REQUIREMENTS

The following elements are not affected by the P-3C Series Aircraft and, therefore, are not included in Part IV of this NTSP:

IV.B. Courseware Requirements

IV.B.1. Training Services

IV.C. Facility Requirements

IV.C.1. Facility Requirements Summary (Space/Support) by Activity

IV.C.2. Facility Requirements Detailed by Activity and Course

IV.C.3. Facility Project Summary by Program

Note: Facilities information will be updated as data is provided to NTMPS.

PART IV - TRAINING LOGISTICS SUPPORT REQUIREMENTS

IV.A. TRAINING HARDWARE

IV.A.1. TTE / GPTE / SPTE / ST / GPETE / SPETE

CIN, COURSE TITLE: D-050-1131, P-3C Update III In-Flight Technician Category 1 (Track D-050-1130)
TRAINING ACTIVITY: VP-30 Fleet Replacement Squadron
LOCATION, UIC: NAS Jacksonville, 65554

ITEM NO.	EQUIPMENT / TYPE OR RANGE OF REPAIR	QTY REQD	DATE REQD	GFE CFE	STATUS
TTE					
670	T58002-105-00 HF Antenna Tensioner	1	Sep 95	GFE	Onboard
680	Sonobuoy Extraction Handle	1	Sep 95	GFE	Onboard
GPTE					
210	27AN Multimeter, Digital	1	Sep 95	GFE	Onboard
GPETE					
100	62068 Magnetic Compensator Test Set	1	Sep 95	GFE	Onboard
110	ALM-236A ESM Test Set	1	Sep 95	GFE	Onboard
115	AN/ARM-201 Ramp Test Set	1	Sep 95	GFE	Onboard
120	AN/AWM-54 with 54 Adapter Aircraft Firing Circuit Test Set	1	Sep 95	GFE	Onboard
135	464-4 Oscilloscope	1	Sep 95	GFE	Onboard
145	Sonobuoy Launch Circuit Make IAW DWG. No. WST-A-460 Tester	1	Sep 95	GFE	Onboard
165	TTU-229 Test Set, Radar Altimeter Warning	1	Sep 95	GFE	Onboard

CIN, COURSE TITLE: D-050-1160, P-3 Series In-Flight Observer (Track D-050-1130)
TRAINING ACTIVITY: VP-30 Fleet Replacement Squadron
LOCATION, UIC: NAS Jacksonville, 65554

ITEM NO.	EQUIPMENT / TYPE OR RANGE OF REPAIR	QTY REQD	DATE REQD	GFE CFE	STATUS
TTE					
800	PRT-5 Emergency Radio	1	Sep 95	GFE	Onboard
801	PRC-90 Survival Radio	1	Sep 95	GFE	Onboard
802	PRC-90-2 Survival Radio	1	Sep 95	GFE	Onboard

IV.A.1. TTE / GPTE / SPTE / ST / GPETE / SPETE

805	Anti-Exposure Suit	1	Sep 95	GFE	Onboard
810	Emergency Exit Light	1	Sep 95	GFE	Onboard
815	Life Raft	1	Sep 95	GFE	Onboard
820	LPU-2 Floatation Device	1	Sep 95	GFE	Onboard
825	NB-8 Parachute Harness	1	Sep 95	GFE	Onboard
830	Portable Fire Extinguisher	1	Sep 95	GFE	Onboard
835	Portable Oxygen Bottle	1	Sep 95	GFE	Onboard
840	Portable Oxygen Regulator	1	Sep 95	GFE	Onboard
845	Practice SAR Kit	1	Sep 95	GFE	Onboard
850	SV-2A/B Survival Vest with Contents	1	Sep 95	GFE	Onboard

CIN, COURSE TITLE: D-050-1143, P-3C AIP In-Flight Technician Category 2 (Track D-050-1130)
TRAINING ACTIVITY: VP-30 Fleet Replacement Squadron
LOCATION, UIC: NAS Jacksonville, 65554

ITEM NO.	EQUIPMENT / TYPE OR RANGE OF REPAIR	QTY REQD	DATE REQD	GFE CFE	STATUS
TTE					
670	T58002-105-00 HF Antenna Tensioner	1	Sep 95	GFE	Onboard
680	Sonobuoy Extraction Handle	1	Sep 95	GFE	Onboard
GPTE					
210	27AN Multimeter, Digital	1	Sep 95	GFE	Onboard
GPETE					
100	62068 Magnetic Compensator Test Set	1	Sep 95	GFE	Onboard
110	ALM-236A ESM Test Set	1	Sep 95	GFE	Onboard
115	AN/ARM-201 Ramp Test Set	1	Sep 95	GFE	Onboard
120	AN/AWM-54 with 54 Adapter Aircraft Firing Circuit Test Set	1	Sep 95	GFE	Onboard
135	464-4 Oscilloscope	1	Sep 95	GFE	Onboard
145	Sonobuoy Launch Circuit Make IAW DWG. No. WST-A-460 Tester	1	Sep 95	GFE	Onboard
165	TTU-229 Test Set, Radar Altimeter Warning	1	Sep 95	GFE	Onboard

IV.A.1. TTE / GPTE / SPTE / ST / GPETE / SPETE

CIN, COURSE TITLE: D-210-1151, P-3C Replacement Non-Acoustic Equipment Operator Category 1 (Track D-050-1132)
TRAINING ACTIVITY: VP-30 Fleet Replacement Squadron
LOCATION, UIC: NAS Jacksonville, 65554

ITEM NO.	EQUIPMENT / TYPE OR RANGE OF REPAIR	QTY REQD	DATE REQD	GFE CFE	STATUS
GPETE					
110	ALM-236A ESM Test Set	1	Sep 95	GFE	Onboard

CIN, COURSE TITLE: D-050-1135, P-3C Update III Non-Acoustic Operator Category 3 (Track D-050-1136)
TRAINING ACTIVITY: VP-30 Fleet Replacement Squadron
LOCATION, UIC: NAS Jacksonville, 65554

ITEM NO.	EQUIPMENT / TYPE OR RANGE OF REPAIR	QTY REQD	DATE REQD	GFE CFE	STATUS
GPETE					
110	ALM-236A ESM Test Set	1	Sep 95	GFE	Onboard

CIN, COURSE TITLE: D-050-1149, P-3C Update III In-Flight Technician Refresher Category 3 (Track D-050-1150)
TRAINING ACTIVITY: VP-30 Fleet Replacement Squadron
LOCATION, UIC: NAS Jacksonville, 65554

ITEM NO.	EQUIPMENT / TYPE OR RANGE OF REPAIR	QTY REQD	DATE REQD	GFE CFE	STATUS
TTE					
670	T58002-105-00 HF Antenna Tensioner	1	Sep 95	GFE	Onboard
680	Sonobuoy Extraction Handle	1	Sep 95	GFE	Onboard
GPTE					
210	27AN Multimeter, Digital	1	Sep 95	GFE	Onboard
GPETE					
100	62068 Magnetic Compensator Test Set	1	Sep 95	GFE	Onboard
110	ALM-236A ESM Test Set	1	Sep 95	GFE	Onboard
115	AN/ARM-201 Ramp Test Set	1	Sep 95	GFE	Onboard
120	AN/AWM-54 with 54 Adapter Aircraft Firing Circuit Test Set	1	Sep 95	GFE	Onboard
135	464-4 Oscilloscope	1	Sep 95	GFE	Onboard

IV.A.1. TTE / GPTE / SPTE / ST / GPETE / SPETE

145	Sonobuoy Launch Circuit Make IAW DWG. No. WST-A-460 Tester	1	Sep 95	GFE	Onboard
165	TTU-229 Test Set, Radar Altimeter Warning	1	Sep 95	GFE	Onboard

CIN, COURSE TITLE: C-102-9586, P-3C Avionics (Initial) Organizational Level Maintenance (Track D-102-1029)
TRAINING ACTIVITY: MTU 1011
LOCATION, UIC: NAMTRAU Jacksonville, 66051

ITEM NO.	EQUIPMENT / TYPE OR RANGE OF REPAIR	QTY REQD	DATE REQD	GFE CFE	STATUS
TTE					
610	AN/ALR-66B(V)3 Countermeasures Receiving Set	1	Aug 96	GFE	Onboard
640	CP-2044/ASQ-212 Digital Data Computer	1	Aug 96	GFE	Onboard
GPTE					
200	Borescope	1	Aug 96	GFE	Onboard
210	27AN Multimeter, Digital	1	Aug 96	GFE	Onboard
212	77/BN Multimeter, Digital	2	Aug 96	GFE	Onboard
225	1502C-03-04 Reflectometer, Time Domain	1	Aug 96	CFE	Onboard
ST					
460	1353AS100-1 Hoist, Bomb (IRDS)	1	Aug 96	GFE	Onboard
465	963182-101 Pulley Assembly (IRDS)	1	Aug 96	GFE	Onboard
470	BM61-101 Fixture, IRDS Handling	1	Aug 96	GFE	Onboard
475	BM62-101 Sling, IRDS/FLIR	1	Aug 96	GFE	Onboard
GPETE					
100	62068 Magnetic Compensator Test Set	1	Aug 96	GFE	Onboard
135	464-4 Oscilloscope	1	Aug 96	GFE	Onboard
170	3372AS100-1 Test Set, Sonobuoy Simulator	1	Aug 96	GFE	Onboard
175	90-000-019 Test Set, Navigation	1	Aug 96	GFE	Onboard
180	15560 Test Set, Transponder	1	Aug 96	GFE	Onboard
185	888-7100-2 Test Set, Countermeasures	1	Aug 96	GFE	Onboard

IV.A.1. TTE / GPTE / SPTE / ST / GPETE / SPETE

CIN, COURSE TITLE: C-102-9586, P-3C Avionics (Initial) Organizational Level Maintenance (Track E-102-1029)
TRAINING ACTIVITY: MTU 1012
LOCATION, UIC: NAMTRAU Whidbey Island, 66058

ITEM NO.	EQUIPMENT / TYPE OR RANGE OF REPAIR	QTY REQD	DATE REQD	GFE CFE	STATUS
TTE					
610	AN/ALR-66B(V)3 Countermeasures Receiving Set	1	Aug 96	GFE	Onboard
640	CP-2044/ASQ-212 Digital Data Computer	1	Aug 96	GFE	Onboard
GPTE					
200	Borescope	1	Aug 96	GFE	Onboard
210	27AN Multimeter, Digital	1	Aug 96	GFE	Onboard
212	77/BN Multimeter, Digital	2	Aug 96	GFE	Onboard
225	1502C-03-04 Reflectometer, Time Domain	1	Aug 96	CFE	Onboard
ST					
460	1353AS100-1 Hoist, Bomb (IRDS)	1	Aug 96	GFE	Onboard
465	963182-101 Pulley Assembly (IRDS)	1	Aug 96	GFE	Onboard
470	BM61-101 Fixture, IRDS Handling	1	Aug 96	GFE	Onboard
475	BM62-101 Sling, IRDS/FLIR	1	Aug 96	GFE	Onboard
GPETE					
100	62068 Magnetic Compensator Test Set	1	Aug 96	GFE	Onboard
135	464-4 Oscilloscope	1	Aug 96	GFE	Onboard
170	3372AS100-1 Test Set, Sonobuoy Simulator	1	Aug 96	GFE	Onboard
175	90-000-019 Test Set, Navigation	1	Aug 96	GFE	Onboard
180	15560 Test Set, Transponder	1	Aug 96	GFE	Onboard
185	888-7100-2 Test Set, Countermeasures	1	Aug 96	GFE	Onboard

IV.A.1. TTE / GPTE / SPTE / ST / GPETE / SPETE

CIN, COURSE TITLE: C-102-9587, P-3C Avionics (Career) Organizational Level Maintenance (Track D-102-1132)
TRAINING ACTIVITY: MTU 1011
LOCATION, UIC: NAMTRAU Jacksonville, 66051

ITEM NO.	EQUIPMENT / TYPE OR RANGE OF REPAIR	QTY REQD	DATE REQD	GFE CFE	STATUS
TTE					
610	AN/ALR-66B(V)3 Countermeasures Receiving Set	1	Aug 96	GFE	Onboard
621	AN/AVX-1 Electro-Optical Sensor System	1	Aug 96	GFE	Onboard
640	CP-2044/ASQ-212 Digital Data Computer	1	Aug 96	GFE	Onboard
GPTE					
200	Borescope	1	Aug 96	GFE	Onboard
210	27AN Multimeter, Digital	1	Aug 96	GFE	Onboard
212	77/BN Multimeter, Digital	2	Aug 96	GFE	Onboard
225	1502C-03-04 Reflectometer, Time Domain	1	Aug 96	CFE	Onboard
ST					
460	1353AS100-1 Hoist, Bomb (IRDS)	1	Aug 96	GFE	Onboard
465	963182-101 Pulley Assembly (IRDS)	1	Aug 96	GFE	Onboard
470	BM61-101 Fixture, IRDS Handling	1	Aug 96	GFE	Onboard
475	BM62-101 Sling, IRDS/FLIR	1	Aug 96	GFE	Onboard
GPETE					
100	62068 Magnetic Compensator Test Set	1	Aug 96	GFE	Onboard
110	ALM-236A ESM Test Set	1	Aug 96	GFE	Pending
112	ACQ5 Datalink Loop Test Set 01-572371-3	1	Aug 96	GFE	Pending
135	464-4 Oscilloscope	1	Aug 96	GFE	Onboard
170	3372AS100-1 Test Set, Sonobuoy Simulator	1	Aug 96	GFE	Onboard
175	90-000-019 Test Set, Navigation	1	Aug 96	GFE	Onboard
180	15560 Test Set, Transponder	1	Aug 96	GFE	Onboard
184	888-7100-1 Test Set, High Power	1	Aug 96	GFE	Onboard
185	888-7100-2 Test Set, Countermeasures	1	Aug 96	GFE	Onboard

IV.A.1. TTE / GPTE / SPTE / ST / GPETE / SPETE

CIN, COURSE TITLE: C-102-9587, P-3C Avionics (Career) Organizational Level Maintenance (Track E-102-1132)
TRAINING ACTIVITY: MTU 1012
LOCATION, UIC: NAMTRAU Whidbey Island, 66058

ITEM NO.	EQUIPMENT / TYPE OR RANGE OF REPAIR	QTY REQD	DATE REQD	GFE CFE	STATUS
TTE					
610	AN/ALR-66B(V)3 Countermeasures Receiving Set	1	Aug 96	GFE	Onboard
621	AN/AVX-1 Electro-Optical Sensor System	1	Aug 96	GFE	Onboard
640	CP-2044/ASQ-212 Digital Data Computer	1	Aug 96	GFE	Onboard
GPTE					
200	Borescope	1	Aug 96	GFE	Onboard
210	27AN Multimeter, Digital	1	Aug 96	GFE	Onboard
212	77/BN Multimeter, Digital	2	Aug 96	GFE	Onboard
225	1502C-03-04 Reflectometer, Time Domain	1	Aug 96	CFE	Onboard
ST					
460	1353AS100-1 Hoist, Bomb (IRDS)	1	Aug 96	GFE	Onboard
465	963182-101 Pulley Assembly (IRDS)	1	Aug 96	GFE	Onboard
470	BM61-101 Fixture, IRDS Handling	1	Aug 96	GFE	Onboard
475	BM62-101 Sling, IRDS/FLIR	1	Aug 96	GFE	Onboard
GPETE					
100	62068 Magnetic Compensator Test Set	1	Aug 96	GFE	Onboard
110	ALM-236A ESM Test Set	1	Aug 96	GFE	Pending
112	ACQ5 Datalink Loop Test Set 01-572371-3	1	Aug 96	GFE	Pending
135	464-4 Oscilloscope	1	Aug 96	GFE	Onboard
170	3372AS100-1 Test Set, Sonobuoy Simulator	1	Aug 96	GFE	Onboard
175	90-000-019 Test Set, Navigation	1	Aug 96	GFE	Onboard
180	15560 Test Set, Transponder	1	Aug 96	GFE	Onboard
184	888-7100-1 Test Set, High Power	1	Aug 96	GFE	Onboard

IV.A.1. TTE / GPTE / SPTE / ST / GPETE / SPETE

185	888-7100-2 Test Set, Countermeasures	1	Aug 96	GFE	Onboard

CIN, COURSE TITLE: C-601-9533, P-3 Power Plant and Related Systems (Career) Organizational Maintenance (Track D-601-1110)
TRAINING ACTIVITY: MTU 1011
LOCATION, UIC: NAMTRAU Jacksonville, 66051

ITEM NO.	EQUIPMENT / TYPE OR RANGE OF REPAIR	QTY REQD	DATE REQD	GFE CFE	STATUS
TTE					
500	597946 Control Propeller	1	Nov 99	GFE	Onboard
505	380258-1-16 Engine, Gas Turbine	1	Nov 99	GFE	Onboard
510	6796658 Pointer Fuel Control	1	Nov 99	GFE	Onboard
515	54H60-77 Propeller	1	Nov 99	GFE	Onboard
520	QECA T56-A-14	1	Nov 99	GFE	Onboard
530	Trainer, P-3 Wing Assembly	1	Nov 99	GFE	Onboard
GPTE					
200	Borescope	1	Nov 99	GFE	Onboard
205	Micrometer Gauge, Depth,	1	Nov 99	GFE	Onboard
215	TD5-5000 Tensiometer, Dial	1	Nov 99	GFE	Onboard
220	Test Set, Power Supply	1	Nov 99	GFE	Onboard
SPTE					
300	6799209 Cable Assembly Set	1	Nov 99	GFE	Onboard
305	6799216 Cable Assembly Set	1	Nov 99	GFE	Onboard
310	Gauge, Prop Checking	1	Nov 99	GFE	Onboard
315	1576AS100-2 Vibration Analysis Test Set	1	Sep 90	GFE	Onboard
400	Adapter, Hoisting	1	Nov 99	GFE	Onboard
405	Fixture, Aircraft	1	Nov 99	GFE	Onboard
410	Fixture, Holding	1	Nov 99	GFE	Onboard
415	Fixture, Setting Rod	1	Nov 99	GFE	Onboard

IV.A.1. TTE / GPTE / SPTE / ST / GPETE / SPETE

420	Gauge, Dial, Turbine Rotor	1	Nov 99	GFE	Onboard
425	Gauge, Internal Spline	1	Nov 99	GFE	Onboard
430	Lifter, Dome Assembly	1	Nov 99	GFE	Onboard
435	Pins, Rigging Kit	1	Nov 99	GFE	Onboard
440	Platform, Maintenance	1	Nov 99	GFE	Onboard
445	STC11000-3 Sling, Main Aircraft	1	Nov 99	GFE	Onboard
450	Stand, Aircraft	1	Nov 99	GFE	Onboard
455	Wrench, Turbine Rotor	1	Nov 99	GFE	Onboard
GPETE					
155	23030179 Test Set Electrical	1	Nov 99	GFE	Onboard

CIN, COURSE TITLE: C-601-9533, P-3 Power Plant and Related Systems (Career) Organizational Maintenance (Track E-601-1110)
TRAINING ACTIVITY: MTU 1012
LOCATION, UIC: NAMTRAU Whidbey Island, 66058

ITEM NO.	EQUIPMENT / TYPE OR RANGE OF REPAIR	QTY REQD	DATE REQD	GFE CFE	STATUS
TTE					
500	597946 Control Propeller	1	Nov 99	GFE	Onboard
505	380258-1-16 Engine, Gas Turbine	1	Nov 99	GFE	Onboard
510	6796658 Pointer Fuel Control	1	Nov 99	GFE	Onboard
515	54H60-77 Propeller	1	Nov 99	GFE	Onboard
520	QECA T56-A-14	1	Nov 99	GFE	Onboard
530	Trainer, P-3 Wing Assembly	1	Nov 99	GFE	Onboard
GPTE					
200	Borescope	1	Nov 99	GFE	Onboard
205	Micrometer Gauge, Depth,	1	Nov 99	GFE	Onboard
215	TD5-5000 Tensiometer, Dial	1	Nov 99	GFE	Onboard
220	Test Set, Power Supply	1	Nov 99	GFE	Onboard

IV.A.1. TTE / GPTE / SPTE / ST / GPETE / SPETE

SPTE					
300	6799209 Cable Assembly Set	1	Nov 99	GFE	Onboard
305	6799216 Cable Assembly Set	1	Nov 99	GFE	Onboard
310	Gauge, Prop Checking	1	Nov 99	GFE	Onboard
315	1576AS100-2 Vibration Analysis Test Set	1	Sep 90	GFE	Onboard
400	Adapter, Hoisting	1	Nov 99	GFE	Onboard
405	Fixture, Aircraft	1	Nov 99	GFE	Onboard
410	Fixture, Holding	1	Nov 99	GFE	Onboard
415	Fixture, Setting Rod	1	Nov 99	GFE	Onboard
420	Gauge, Dial, Turbine Rotor	1	Nov 99	GFE	Onboard
425	Gauge, Internal Spline	1	Nov 99	GFE	Onboard
430	Lifter, Dome Assembly	1	Nov 99	GFE	Onboard
435	Pins, Rigging Kit	1	Nov 99	GFE	Onboard
440	Platform, Maintenance	1	Nov 99	GFE	Onboard
445	STC11000-3 Sling, Main Aircraft	1	Nov 99	GFE	Onboard
450	Stand, Aircraft	1	Nov 99	GFE	Onboard
455	Wrench, Turbine Rotor	1	Nov 99	GFE	Onboard
GPETE					
155	23030179 Test Set Electrical	1	Nov 99	GFE	Onboard

CIN, COURSE TITLE: C-102-3600, P-3 Aircraft Improvement Program Organization Maintenance Course (Track D-102-6719)
TRAINING ACTIVITY: MTU 1011
LOCATION, UIC: NAMTRAU Jacksonville, 66051

ITEM NO.	EQUIPMENT / TYPE OR RANGE OF REPAIR	QTY REQD	DATE REQD	GFE CFE	STATUS
TTE					
600	AN/AAR-47 Missile Warning System	1	Nov 02	GFE	Pending
605	AN/ALE-47 Countermeasures Dispensing System	1	Nov 02	GFE	Pending
607	AN/ALR-95 Specific Emitter Identification System	1	Nov 02	GFE	Pending

IV.A.1. TTE / GPTE / SPTE / ST / GPETE / SPETE

611	AN/ALR-66C(V)3 Countermeasures Receiving Set	1	Nov 02	GFE	Pending
615	AN/APS-137B(V)5 Radar System	1	Nov 02	GFE	Pending
620	AN/ASX-4 Advanced Imaging Multi-Spectral Sensor System	1	Nov 02	GFE	Pending
625	AN/EP-2060 Pulse Analyzer	1	Nov 02	GFE	Pending
630	AN/USC-42(V) Mini DAMA	1	Aug 96	GFE	Onboard
635	PT-540(V)7 Hard Copy Recorder	1	Aug 96	GFE	Onboard
645	CP-2339/ASQ-222 Digital Data Computer	1	Nov 02	GFE	Pending
647	Replacement Data Storage System	1	Nov 02	GFE	Pending
650	Tactical Receiver Equipment	1	Nov 02	GFE	Pending
651	Officer In Tactical Command Information Exchange System	1	Nov 02	GFE	Pending
GPETE					
105	880-2788-3 Accessory Kit, Electronic Equipment	1	Jun 01	GFE	Pending
125	3313AS900-1 Test Set, Flight Line	1	Jun 01	GFE	Pending
130	3359AS1000 ALR-66 Memory Loader Verifier	6	Jun 01	GFE	Pending
140	3359AS925 PCMCIA Memory Card	1	Jun 01	GFE	Pending
150	3389AS400-001 Test Set CMDS SV/FL	1	Jun 01	GFE	Pending
160	1328AS2000 Test Set, Guided Missile System	1	Jun 01	GFE	Pending

IV.A.2. TRAINING DEVICES

DEVICE: 2C23 P-3B Aircraft Cockpit Familiarization Trainer
DESCRIPTION: The P-3C Aircraft Cockpit Familiarization Trainer is a mockup of the P-3C flight station used to introduce first tour pilots and flight engineers to all the P-3C's flight station systems, instruments, and power sources.
MANUFACTURER: Hydrosystems, Inc.
CONTRACT NUMBER: N61339-69-C-0218
TEE STATUS: NA

TRAINING ACTIVITY: VP-30 Fleet Replacement Squadron
LOCATION, UIC : NAS Jacksonville, 65554

QTY REQD	DATE REQD	RFT DATE	STATUS	COURSES SUPPORTED	
1	Mar 85	Mar 85	Onboard	D-2A-1101	(Track D-2A-1111)
				D-2A-1102	(Track D-2A-1112)
				D-2A-1004	(Track D-2A-1115)
				D-2B-1101	(Track D-2A-1116)
				D-2D-1105	
				D-050-1003	
				D-050-1002	(Track D-050-1008)
				D-050-1004	(Track D-050-1010)

DEVICE: 2C23A P-3C Cockpit Familiarization Trainer
DESCRIPTION: The 2C23A P-3C Cockpit Familiarization Trainer is the same as the 2C23 P-3C Aircraft Cockpit Familiarization Trainer.
MANUFACTURER: Hydrosystems, Inc.
CONTRACT NUMBER: N61339-69-C-0218
TEE STATUS: NA

TRAINING ACTIVITY: VP-30 Fleet Replacement Squadron
LOCATION, UIC : NAS Jacksonville, 65554

QTY REQD	DATE REQD	RFT DATE	STATUS	COURSES SUPPORTED	
2	Mar 85	Mar 85	Onboard	D-2A-1101	(Track D-2A-1111)
				D-2A-1102	(Track D-2A-1112)
				D-2A-1004	(Track D-2A-1115)
				D-2B-1101	(Track D-2A-1116)
				D-2D-1105	
				D-050-1003	
				D-050-1002	(Track D-050-1008)
				D-050-1004	(Track D-050-1010)

IV.A.2. TRAINING DEVICES

DEVICE: 2C41 P-3C Aircraft Cockpit Familiarization Trainer

DESCRIPTION: The 2C41 P-3C Cockpit Procedures Trainer (CPT) is a full sized mockup used to familiarize aircrews with the working environment of the P-3C aircraft cockpit. The CPT allows the capability of executing all P-3C normal and emergency procedures. The goal of the CPT is to achieve individual competence and proficient performance of the pilot, copilot, and flight engineer through comprehensive initial and refresher training.

MANUFACTURER: Singer Link Division

CONTRACT NUMBER: N61339-79-C-0154

TEE STATUS: NA

TRAINING ACTIVITY: VP-30 Fleet Replacement Squadron

LOCATION, UIC : NAS Jacksonville, 65554

QTY REQD	DATE REQD	RFT DATE	STATUS	COURSES SUPPORTED	
2	Mar 85	Mar 85	Onboard	D-2A-1101	(Track D-2A-1111)
				D-2A-1102	(Track D-2A-1112)
				D-2A-1004	(Track D-2A-1115)
				D-2B-1101	(Track D-2A-1116)
				D-2D-1105	
				D-050-1003	
				D-050-1002	(Track D-050-1008)
				D-050-1004	(Track D-050-1010)

IV.A.2. TRAINING DEVICES

DEVICE: 2F140 WST/TORT

DESCRIPTION: The 2F140 P-3C Weapon System Trainer (WST) or Tactical Operational Readiness Trainer (TORT) provides a three dimensional simulated P-3C aircraft environment that incorporates an Update III acoustic suite including the Single Advanced Signal Processor (SASP) processor and displays along with the Advanced Signal Communications Link (ASCL) receiver and antenna system. The TORT is utilized for acoustic and non-acoustic scenarios and was originally developed in the 16-channel acoustic subsystem configuration but later modified to the 32 Channel Expansion (CHEX) configuration. Additional improvements in the TORT design include a new instructor console and simulation computer complex. The TORThas been developed to support enhanced training and readiness of P-3C aircrews. Automation of many manual tasks including target, ocean, and mission generation together with a recording and replay capability are included. Landmass outline database provides radar returns for shoreline only. Mathematical modeling simulates the underwater acoustic environment. The student tactical stations are actual P-3C Update III equipment which is stimulated by a host computer.

MANUFACTURER: Singer Link

CONTRACT NUMBER: N61339-85-C-0007

TEE STATUS: NA

TRAINING ACTIVITY: VP-30 Fleet Replacement Squadron

LOCATION, UIC : NAS Jacksonville, 65554

QTY REQD	DATE REQD	RFT DATE	STATUS	COURSES SUPPORTED	
1	Mar 85	Mar 85	Onboard	D-2A-1101	(Track D-2A-1111)
				D-2A-1102	(Track D-2A-1112)
				D-2A-1004	(Track D-2A-1115)
				D-2B-1101	(Track D-2A-1116)
				D-2D-1105	
				D-2D-1107	
				D-2D-1101	(Track D-2D-1111)
				D-2D-1102	(Track D-2D-1112)
				D-2D-1115	(Track D-2D-1113)
				D-210-1151	(Track D-050-1132)
				D-050-1135	(Track D-050-1136)
				D-050-1139	(Track D-050-1140)
				D-210-1130	(Track D-050-1230)
				D-210-1138	

IV.A.2. TRAINING DEVICES

DEVICE: 2F140A WST/TORT
DESCRIPTION: The 2F140A P-3C Weapon System Trainer (WST) or Tactical Operational Readiness Trainer (TORT) is the same as the 2F140 WST/TORT Trainer.
MANUFACTURER: Dual, Incorporated
CONTRACT NUMBER: N00167-94-D-0085
TEE STATUS: NA

TRAINING ACTIVITY: VP-30 Fleet Replacement Squadron
LOCATION, UIC : NAS Jacksonville, 65554

QTY REQD	DATE REQD	RFT DATE	STATUS	COURSES SUPPORTED	
1	Mar 85	Mar 85	Onboard	D-2A-1101	(Track D-2A-1111)
				D-2A-1102	(Track D-2A-1112)
				D-2A-1004	(Track D-2A-1115)
				D-2B-1101	(Track D-2A-1116)
				D-2D-1105	
				D-2D-1107	
				D-2D-1101	(Track D-2D-1111)
				D-2D-1102	(Track D-2D-1112)
				D-2D-1115	(Track D-2D-1113)
				D-210-1151	(Track D-050-1132)
				D-050-1135	(Track D-050-1136)
				D-050-1139	(Track D-050-1140)
				D-210-1130	(Track D-050-1230)
				D-210-1138	

IV.A.2. TRAINING DEVICES

DEVICE: 2F179 Tactical Aircrew Coordination Trainer (PACT)

DESCRIPTION: The 2F179 Tactical Aircrew Coordination Trainer (TACT) is a laboratory designed to simulate equipment onboard a P-3C Update III AIP aircraft. It consists of two Instructor/Operator Stations and five aircrew ASUW mission Operator stations: Flight Station, Tactical Coordinator (TACCO), Navigator/Communicator (NAV/COM), Sensor Station Three (SS-3), and AVX-1 Operator. Acoustic Operator training for Sensor Station One (SS-1) and SS-2 is not provided due to the absence of subsurface environment simulation capability. The appearance and operation of all controls and displays used in the 2F179 PACT duplicate those in the actual aircraft. The 2F179 PACT is capable of operating in either of two modes, selectable at start-up. One mode is for the non-AIMS modified type aircraft (IRDS mode) and the other is for AIMS modified aircraft (AIMS mode). Training emphasis is placed on crew coordination and proficiency in operating integrated communications systems, surveillance systems, targeting systems, survivability systems, display systems, and control systems. Represented P-3C AIP systems for which systems initialization and operation training are provided include: AIC-41 DCMS, OASIS Display System, Image Processor (including ICE), AIP Operational Program, ALR-66, EP-2060, Maverick, Harpoon (On-line and Off-line), APS-137C(V)5 (including ISAR, SAR, ELCID), ASX-4 AIMS, AN/AAR-47, AN/ALE-47, MATT, and Mini-DAMA Set-up.

MANUFACTURER: L3 Communications, Link Simulation and Training

CONTRACT NUMBER: N00019-97-C-0025

TEE STATUS: NA

TRAINING ACTIVITY: CPRWNG 5

LOCATION, UIC : NAS Brunswick, 53823

QTY REQD	DATE REQD	RFT DATE	STATUS	COURSES SUPPORTED
1	Apr 02	Apr 02	Pending	D-2A-1104

IV.A.2. TRAINING DEVICES

TRAINING ACTIVITY: VP-30 Fleet Replacement Squadron
LOCATION, UIC : NAS Jacksonville, 65554

QTY REQD	DATE REQD	RFT DATE	STATUS	COURSES SUPPORTED	
1	Mar 85	Mar 85	Onboard	D-2A-1104	
				D-2A-1101	(Track D-2A-1111)
				D-2A-1102	(Track D-2A-1112)
				D-2B-1105	(Track D-2A-1113)
				D-2A-1004	(Track D-2A-1115)
				D-2B-1101	(Track D-2A-1116)
				D-2D-1107	
				D-2D-1101	(Track D-2D-1111)
				D-2D-1102	(Track D-2D-1112)
				D-2D-1115	(Track D-2D-1113)
				D-050-1004	(Track D-050-1010)
				D-210-1151	(Track D-050-1132)
				D-050-1135	(Track D-050-1136)

TRAINING ACTIVITY: MTU 1012
LOCATION, UIC : NAMTRAU Whidbey Island, 66058

QTY REQD	DATE REQD	RFT DATE	STATUS	COURSES SUPPORTED
1	Feb 02	Feb 02	Onboard	D-2A-1104

IV.A.2. TRAINING DEVICES

DEVICE: 2F87(F) P-3C Aircraft Operational Flight Trainer

DESCRIPTION: The 2F187(F) Operational Flight Trainer (OFT) is designed to simulate flight conditions for P-3C pilot and flight engineer training in normal and emergency conditions. Using a six-degree of freedom of motion system and a multi-window computer generated imagery visual simulation system, the 2F187(F) OFT realistically simulates the in-flight environment. Each 2F187(F) OFT has provisions for coupling to a P-3C tactics trainer, providing a complete Weapons System Trainer for the P-3C aircraft. The interior of the 2F187(F) OFT flight station represents the P-3C aircraft as normally viewed by crewmembers. Instruments, panels, controls, and other characteristics are identical to those found in operational aircraft. In general, the appearance, feel, movement, and sounds of the aircraft and all flight station equipment are realistically simulated. The device simulates flight in any geographic area of the world, at all operating altitudes, and in virtually any weather condition. Approximately 500 radio navigation facilities are simulated. The 2F187(F) OFT has the capability, through a digital voice synthesizer, to automatically radar vector the flight crews to a landing at any one of 50 selectable airfields. Approximately 400 realistic malfunctions are simulated, ranging from a simple loss of an indicator to serious and complex emergency situations.

MANUFACTURER: Singer Simulation Products

CONTRACT NUMBER: N61339-73-C-0106

TEE STATUS: NA

TRAINING ACTIVITY: VP-30 Fleet Replacement Squadron

LOCATION, UIC : NAS Jacksonville, 65554

QTY REQD	DATE REQD	RFT DATE	STATUS	COURSES SUPPORTED	
3	Feb 85	Mar 85	Onboard	D-2A-1104	
				D-2A-1101	(Track D-2A-1111)
				D-2A-1102	(Track D-2A-1112)
				D-2B-1105	(Track D-2A-1113)
				D-2A-1004	(Track D-2A-1115)
				D-2B-1101	(Track D-2A-1116)
				D-2D-1105	
				D-050-1003	
				D-050-1002	(Track D-050-1008)
				D-050-1004	(Track D-050-1010)

IV.A.2. TRAINING DEVICES

DEVICE: 14B40A Non-Acoustic Part Task Trainer

DESCRIPTION: The 14B40A P-3C Non-Acoustic Part Task Trainer (NAPTT) is designed to provide training for the P-3C Non-Acoustic Operator. The NAPTT can be used for basic, intermediate, and advanced training in radar search and mine laying, use and interpretation of MAD equipment, use and interpretation of ALR-66 ESM equipment, and the APS-115 Radar system. The NAPTT provides realistic positional training in conjunction with P-3C missions. The NAPTT provides for three trainee positions and one instructor/operator position. The trainer is designed to simulate one P-3C aircraft carrying three completely independent SS-3 positions. The instructor/operator controls the aircraft and all target parameters. Each trainee station is an enclosed replica of the SS-3 in the P-3C aircraft. The NAPTT provides the student skills and realistic practice in the operation and interpretation of the AN/APS-115 Radar System, the AN/ASQ-81 MAD System, the AN/ALQ-78 and AN/ALR-66(V)3 ESM Systems, and operational software management. Through the use of an index tableau, and six target tableaus, the device operator can insert all required target parameters and environmental conditions such as wind, magnetic storms, and radar interference. NAPTT provides simulation of P-3C aircraft from sea level to 30,000 feet, at speeds up to 450 knots and flight altitudes appropriate to maneuvers. Radar targets including three single surface ships of different sizes, a convoy of six surface ships of different sizes, and two aircraft. Each target is capable of responding to IFF and SIF signals. MAD signals are generated in connection with each target and vary according to aircraft headings, range, crossing conditions, and atmospherics. The NAPTT has a three-dimensional Weather Avoidance and Digital Radar Landmass System to provide a more realistic training environment for weather landmass recognition and avoidance.

MANUFACTURER: Singer Link Division

CONTRACT NUMBER: N61339-79-G-0008

TEE STATUS: NA

TRAINING ACTIVITY: VP-30 Fleet Replacement Squadron

LOCATION, UIC : NAS Jacksonville, 65554

QTY REQD	DATE REQD	RFT DATE	STATUS	COURSES SUPPORTED
1	Feb 85	Mar 85	Onboard	D-210-1151 (Track D-050-1132) D-050-1133 D-050-1135 (Track D-050-1136)

IV.A.2. TRAINING DEVICES

DEVICE: Deployable Acoustic Readiness Trainer System

DESCRIPTION: The Deployable Acoustic Readiness Trainer System (DARTS) is a portable device consisting of a sixteen track magnetic tape reproducer, interface unit, and sets of training tapes representing recordings of actual underwater sounds associated with both passive and active sensor environments. Training tapes may be played back into the AQA-7 DIFAR Computer Recorder or SASP front end in place of the sonobuoy receiver output in the P-3C aircraft for in-aircraft training. DARTS may also be used as a signal source in acoustic trainers such as the APTT and SASP APTT.

MANUFACTURER: Singer Link

CONTRACT NUMBER: NA

TEE STATUS: NA

TRAINING ACTIVITY: CPRWNG 11

LOCATION, UIC : NAS Jacksonville, 09461

QTY REQD	DATE REQD	RFT DATE	STATUS	COURSES SUPPORTED
2	Sep 96	Sep 96	Onboard	D-050-1139 (Track D-050-1140) D-210-1130 (Track D-050-1230)

TRAINING ACTIVITY: CPRWNG 5

LOCATION, UIC : NAS Brunswick, 53823

QTY REQD	DATE REQD	RFT DATE	STATUS	COURSES SUPPORTED
2	Sep 96	Sep 96	Onboard	D-050-1139 (Track D-050-1140) D-210-1130 (Track D-050-1230)

TRAINING ACTIVITY: COMPATRECONFPAC

LOCATION, UIC : MCB Kaneohe Bay, 09517

QTY REQD	DATE REQD	RFT DATE	STATUS	COURSES SUPPORTED
2	Sep 96	Sep 96	Onboard	D-050-1139 (Track D-050-1140) D-210-1130 (Track D-050-1230)

TRAINING ACTIVITY: CPRWNG 10

LOCATION, UIC : NAS Whidbey Island, 55165

QTY REQD	DATE REQD	RFT DATE	STATUS	COURSES SUPPORTED
2	Sep 96	Sep 96	Onboard	D-050-1139 (Track D-050-1140) D-210-1130 (Track D-050-1230)

IV.A.2. TRAINING DEVICES

DEVICE: P-3C AIP Aircraft
DESCRIPTION: The P-3C AIP Aircraft is an actual operational aircraft used to facilitate training. For IFT training at VP-30, availability depends upon the VP-30 flight schedule. For WST training, currently at NAS Patuxent River, availability is at the discretion of Maintenance Control at VX-20 (formerly Force Warfare.)
MANUFACTURER: Lockheed
CONTRACT NUMBER: NA
TEE STATUS: NA

TRAINING ACTIVITY: VP-30 Fleet Replacement Squadron
LOCATION, UIC : NAS Jacksonville, 65554

QTY REQD	DATE REQD	RFT DATE	STATUS	COURSES SUPPORTED
1	Jun 01	Jun 01	Onboard	D-050-1131 (Track D-050-1130)
				D-050-1160 (Track D-050-1130)
				D-050-1143 (Track D-050-1130)
				C-102-3600 (Track D-102-6719)

DEVICE: Armament Maintenance Trainer
DESCRIPTION: The Armament Maintenance Trainer (AMT) consists of five panels and associated equipment including operational panels, control boxes, cables, bomb bay, bomb racks, sonobouy chutes, and Harpoon Missile System equipment. The AMT is designed to aid in the development of skills and knowledge of personnel assigned to maintain the P-3C Aircraft Ordnance Systems. The trainer tasks are accomplished by demonstration of normal, abnormal, and emergency operation of actual or simulated aircraft equipment. The AMT is capable of simulating a malfunction to provide a realistic approach trouble-shooting and the necessary corrective maintenance action.
MANUFACTURER: Singer Link
CONTRACT NUMBER: NA
TEE STATUS: NA

TRAINING ACTIVITY: VP-30 Fleet Replacement Squadron
LOCATION, UIC : NAS Jacksonville, 65554

QTY REQD	DATE REQD	RFT DATE	STATUS	COURSES SUPPORTED
3	Feb 85	Mar 85	Onboard	C-646-9571 (Track D-646-1140)

TRAINING ACTIVITY: MTU 1012
LOCATION, UIC : NAMTRAU Whidbey Island, 66058

QTY REQD	DATE REQD	RFT DATE	STATUS	COURSES SUPPORTED
1	Feb 97	Mar 97	Onboard	C-646-9571 (Track E-646-1140)

IV.A.2. TRAINING DEVICES

DEVICE: CP-2044 CBT Computer System
DESCRIPTION: The CP-2044 Computer Based Training (CBT) Interactive Graphics Training Device (IGTD) is Commercial Off the Shelf (COTS) equipment consisting of a desktop computer and interactive training software that is used to provide maintenance instruction in a single user or group environment.
MANUFACTURER: COTS
CONTRACT NUMBER: NA
TEE STATUS: NA

TRAINING ACTIVITY: MTU 1011
LOCATION, UIC : NAMTRAU Jacksonville, 66051

QTY REQD	DATE REQD	RFT DATE	STATUS	COURSES SUPPORTED
1	Aug 96	Aug 96	Onboard	C-102-9586 (Track D-102-1029) C-102-9587 (Track D-102-1132)

TRAINING ACTIVITY: MTU 1012
LOCATION, UIC : NAMTRAU Whidbey Island, 66058

QTY REQD	DATE REQD	RFT DATE	STATUS	COURSES SUPPORTED
1	Aug 96	Aug 96	Onboard	C-102-9586 (Track D-102-1029) C-102-9587 (Track D-102-1132)

IV.A.2. TRAINING DEVICES

DEVICE: P-3 Aircraft Fuel Panel
DESCRIPTION: The P-3 Aircraft Fuel Panel demonstrates what actual aircraft equipment looks like.
MANUFACTURER: UNK
CONTRACT NUMBER: UNK
TEE STATUS: UNK

TRAINING ACTIVITY: MTU 1011
LOCATION, UIC : NAMTRAU Jacksonville, 66051

QTY REQD	DATE REQD	RFT DATE	STATUS	COURSES SUPPORTED
1	Nov 99	Nov 99	Onboard	C-601-9532 (Track D-601-1011)
				C-601-9533 (Track D-601-1110)

TRAINING ACTIVITY: MTU 1012
LOCATION, UIC : NAMTRAU Whidbey Island, 66058

QTY REQD	DATE REQD	RFT DATE	STATUS	COURSES SUPPORTED
1	Nov 99	Nov 99	Onboard	C-601-9532 (Track E-601-1011)
				C-601-9533 (Track E-601-1110)

DEVICE: P-3 Prop Hydraulic System Trainer
DESCRIPTION: The P-3 Prop Hydraulic System Trainer.
MANUFACTURER: UNK
CONTRACT NUMBER: UNK
TEE STATUS: UNK

TRAINING ACTIVITY: MTU 1011
LOCATION, UIC : NAMTRAU Jacksonville, 66051

QTY REQD	DATE REQD	RFT DATE	STATUS	COURSES SUPPORTED
1	Nov 99	Nov 99	Onboard	C-601-9532 (Track D-601-1011)
				C-601-9533 (Track D-601-1110)

TRAINING ACTIVITY: MTU 1012
LOCATION, UIC : NAMTRAU Whidbey Island, 66058

QTY REQD	DATE REQD	RFT DATE	STATUS	COURSES SUPPORTED
1	Nov 99	Nov 99	Onboard	C-601-9532 (Track E-601-1011)
				C-601-9533 (Track E-601-1110)

IV.A.2. TRAINING DEVICES

DEVICE: P-3C AIP Integrated Avionics Trainers (IAT)
DESCRIPTION: The P-3C AIP Integrated Avionics Trainer (IAT) is the future AIP version of the P-3C IATs currently at MTU 1011 and MTU 1012. This trainer will be a laboratory fitted with a P-3C aircraft mockup equipped with selected P-3C AIP systems. The AIP IAT will be a new trainer and not a modification of any existing trainer(s).
MANUFACTURER: TBD
CONTRACT NUMBER: TBD
TEE STATUS: NA

TRAINING ACTIVITY: MTU 1011
LOCATION, UIC : NAMTRAU Jacksonville, 66051

QTY REQD	DATE REQD	RFT DATE	STATUS	COURSES SUPPORTED
1	Jun 03		Pending	C-102-3600 (Track D-102-6719)

TRAINING ACTIVITY: MTU 1012
LOCATION, UIC : NAMTRAU Whidbey Island, 66058

QTY REQD	DATE REQD	RFT DATE	STATUS	COURSES SUPPORTED
1	Jun 05		Pending	C-102-3600 (Track D-102-6719)

DEVICE: P-3C AIP Lab/Temp Trainer
DESCRIPTION: The P-3C AIP Lab/Temp Trainer is a P-3C AIP avionics gear test facility cum maintenance trainer which is normally used to test AIP equipment but also is periodically made available to provide P-3C AIP organizational level maintenance training until one or more AIP IATs come online at NAMTRA.
NOTE: Facility is located at NAS Patuxent River while course is managed by NAMTRAU Jacksonville.
MANUFACTURER: NA
CONTRACT NUMBER: NA
TEE STATUS: NA

TRAINING ACTIVITY: MTU 1011
LOCATION, UIC : NAMTRAU Jacksonville, 66051

QTY REQD	DATE REQD	RFT DATE	STATUS	COURSES SUPPORTED
1	Jun 00	Jun 00	Onboard	C-102-3600 (Track D-102-6719)

IV.A.2. TRAINING DEVICES

DEVICE: P-3C ESM SST
DESCRIPTION: The P-3C Electronic Surveillance Methods (ESM) Sub System Trainer (SST) [MTU 1011 S/N 172701] comprises ESM avionics equipment that is used to train technicians in maintenance and troubleshooting techniques.
MANUFACTURER: Lockheed Aeronautical Systems Company
CONTRACT NUMBER: NA
TEE STATUS: NA

TRAINING ACTIVITY: MTU 1011
LOCATION, UIC : NAMTRAU Jacksonville, 66051

QTY REQD	DATE REQD	RFT DATE	STATUS	COURSES SUPPORTED
1	Aug 96	Aug 96	Onboard	C-102-9586 (Track D-102-1029) C-102-9587 (Track D-102-1132)

DEVICE: P-3C MAD/SAD SSMT
DESCRIPTION: The P-3C Magnetic Anomaly Detector (MAD)/Submarine Anomaly Detector (SAD) Sub System Maintenance Trainer (SSMT) [MTU 1011 P/N 110301, MTU P/N 273501] is comprised of a portable bench with MAD/SAD gear installed that is used to train maintenance technicians in the troubleshooting and maintenance of the associated systems.
MANUFACTURER: Lockheed Aeronautical Systems Company
CONTRACT NUMBER: NA
TEE STATUS: NA

TRAINING ACTIVITY: MTU 1011
LOCATION, UIC : NAMTRAU Jacksonville, 66051

QTY REQD	DATE REQD	RFT DATE	STATUS	COURSES SUPPORTED
1	Aug 96	Aug 96	Onboard	C-102-9586 (Track D-102-1029) C-102-9587 (Track E-102-1132)

TRAINING ACTIVITY: MTU 1012
LOCATION, UIC : NAMTRAU Whidbey Island, 66058

QTY REQD	DATE REQD	RFT DATE	STATUS	COURSES SUPPORTED
1	Aug 96	Aug 96	Onboard	C-102-9586 (Track E-102-1029) C-102-9587 (Track D-102-1132)

IV.A.2. TRAINING DEVICES

DEVICE: P-3C UIII Integrated Avionics Trainer
DESCRIPTION: The P-3C Update III Integrated Avionics Trainer (IAT) [MTU 1011 P/N 110301, MTU 1012 P/N 210301] is comprised of a laboratory equipped with a mock P-3C interior complete with standard size cockpit, operator stations, and 28 electronics gear racks and bays and associated equipment identical to those used on the aircraft. The electronics suite is comprised of selected P-3C Update III equipment including acoustic and non-acoustic sensors, data processing and display, navigation, navigation, communication, and associated systems. The IAT aids the Weapons System Technician in the development of skills required to troubleshoot and maintain the integrated avionics systems installed on the P3C Update III aircraft.
MANUFACTURER: Lockheed Aeronautical Systems Company
CONTRACT NUMBER: N00019-90-C-0192
TEE STATUS: NA

TRAINING ACTIVITY: MTU 1011
LOCATION, UIC : NAMTRAU Jacksonville, 66051

QTY REQD	DATE REQD	RFT DATE	STATUS	COURSES SUPPORTED
1	Jan 90	Jan 90	Onboard	C-102-9586 (Track D-102-1029) C-102-9587 (Track D-102-1132)

TRAINING ACTIVITY: MTU 1012
LOCATION, UIC : NAMTRAU Whidbey Island, 66058

QTY REQD	DATE REQD	RFT DATE	STATUS	COURSES SUPPORTED
1	Oct 95	Oct 95	Onboard	C-102-9586 (Track E-102-1029) C-102-9587 (Track E-102-1132)

DEVICE: P-3C VHF/ICS SSMT
DESCRIPTION: The P-3C VHF/ICS SSMT is a Very High Frequency (VHF) Radio/Intercommunications System (ICS) maintenance trainer [MTU 1011 S/N 161101].
MANUFACTURER: Lockheed Aeronautical Systems Company
CONTRACT NUMBER: NA
TEE STATUS: NA

TRAINING ACTIVITY: MTU 1011
LOCATION, UIC : NAMTRAU Jacksonville, 66051

QTY REQD	DATE REQD	RFT DATE	STATUS	COURSES SUPPORTED
1	Aug 96	Aug 96	Onboard	C-102-9586 (Track E-102-1029) C-102-9587 (Track E-102-1132)

IV.A.2. TRAINING DEVICES

DEVICE: T56-A-14 Engine Cutaway
DESCRIPTION: The T56-A-14 Engine Cutaway is a trainer comprising a full-scale mockup of T-56-A-14 engine with cutaway sections revealing the internal construction of the turboprop engine.
MANUFACTURER: UNK
CONTRACT NUMBER: UNK
TEE STATUS: UNK

TRAINING ACTIVITY: MTU 1011
LOCATION, UIC : NAMTRAU Jacksonville, 66051

QTY REQD	DATE REQD	RFT DATE	STATUS	COURSES SUPPORTED
1	Nov 99	Nov 99	Onboard	C-601-9532 (Track E-601-1011) C-601-9533 (Track E-601-1110)

TRAINING ACTIVITY: MTU 1012
LOCATION, UIC : NAMTRAU Whidbey Island, 66058

QTY REQD	DATE REQD	RFT DATE	STATUS	COURSES SUPPORTED
1	Nov 99	Nov 99	Onboard	C-601-9532 (Track E-601-1011) C-601-9533 (Track E-601-1110)

IV.B. COURSEWARE REQUIREMENTS

IV.B.1. TRAINING SERVICES

IV.B.2. CURRICULA MATERIALS AND TRAINING AIDS

CIN, COURSE TITLE: D-2A-1104, P-3C Update Replacement Pilot Category 4
TRAINING ACTIVITY: VP-30 Fleet Replacement Squadron
LOCATION, UIC: NAS Jacksonville, 65554

TYPES OF MATERIAL OR AID	QTY REQD	DATE REQD	STATUS
EFDS Job Aid	4	Sep 95	Onboard
Flight Station Job Aid and In-flight Job Aid	2	Sep 95	Onboard
Student Guide with Appendices	2	Sep 95	Onboard

CIN, COURSE TITLE: D-2A-1111, P-3C Update Fleet Replacement Pilot Category 1 Pipeline
TRAINING ACTIVITY: VP-30 Fleet Replacement Squadron
LOCATION, UIC: NAS Jacksonville, 65554

TYPES OF MATERIAL OR AID	QTY REQD	DATE REQD	STATUS
EFDS Job Aid	20	Sep 95	Onboard

CIN, COURSE TITLE: D-2A-1101, P-3C Update Replacement Pilot Category 1 (Track D-2A-1111)
TRAINING ACTIVITY: VP-30 Fleet Replacement Squadron
LOCATION, UIC: NAS Jacksonville, 65554

TYPES OF MATERIAL OR AID	QTY REQD	DATE REQD	STATUS
Flight Station Job Aid and In-flight Job Aid	20	Sep 95	Onboard
P-3C Circuit Breaker Book	20	Sep 95	Onboard
Student Guide with Appendices	20	Sep 95	Onboard

CIN, COURSE TITLE: D-2A-1102, P-3C Pilot Category 3 (Track D-2A-1112)
TRAINING ACTIVITY: Aviation Survival Training Center
LOCATION, UIC: NAS Jacksonville, 39862

TYPES OF MATERIAL OR AID	QTY REQD	DATE REQD	STATUS
EFDS Job Aid	4	Sep 95	Onboard
Flight Station Job Aid and In-flight Job Aid	4	Sep 95	Onboard
P-3C Circuit Breaker Book	4	Sep 95	Onboard
Student Guide with Appendices	4	Sep 95	Onboard

CIN, COURSE TITLE: D-2B-1105, P-3C Pilot Category 5 (Prospective CO/XO) (Track D-2A-1113)
TRAINING ACTIVITY: VP-30 Fleet Replacement Squadron
LOCATION, UIC: NAS Jacksonville, 65554

TYPES OF MATERIAL OR AID	QTY REQD	DATE REQD	STATUS
EFDS Job Aid	2	Sep 95	Onboard
Flight Station Job Aid and In-flight Job Aid	2	Sep 95	Onboard
P-3C Circuit Breaker Book	2	Sep 95	Onboard
Student Guide with Appendices	2	Sep 95	Onboard

IV.B.2. CURRICULA MATERIALS AND TRAINING AIDS

CIN, COURSE TITLE: D-2A-1115, P-3 Fleet Replacement Pilot (Non-USW) Category 1 Pipeline
TRAINING ACTIVITY: VP-30 Fleet Replacement Squadron
LOCATION, UIC: NAS Jacksonville, 65554

TYPES OF MATERIAL OR AID	QTY REQD	DATE REQD	STATUS
EFDS Job Aid	4	Sep 95	Onboard

CIN, COURSE TITLE: D-2A-1004, P-3C Replacement Pilot (Non-USW) Category 1 (Track D-2A-1115)
TRAINING ACTIVITY: VP-30 Fleet Replacement Squadron
LOCATION, UIC: NAS Jacksonville, 65554

TYPES OF MATERIAL OR AID	QTY REQD	DATE REQD	STATUS
Flight Station Job Aid and In-flight Job Aid	4	Sep 95	Onboard
P-3C Circuit Breaker Book	2	Sep 95	Onboard
Student Guide with Appendices	4	Sep 95	Onboard

CIN, COURSE TITLE: D-2B-1101, P-3C Replacement Pilot (Non-USW) Category 3 (Track D-2A-1116)
TRAINING ACTIVITY: VP-30 Fleet Replacement Squadron
LOCATION, UIC: NAS Jacksonville, 65554

TYPES OF MATERIAL OR AID	QTY REQD	DATE REQD	STATUS
EFDS Job Aid	4	Sep 95	Onboard
Flight Station Job Aid and In-flight Job Aid	4	Sep 95	Onboard
P-3C Circuit Breaker Book	4	Sep 95	Onboard
Student Guide with Appendices	4	Sep 95	Onboard

CIN, COURSE TITLE: D-2D-1105, P-3C Pilot Instructor Under Training (IUT)
TRAINING ACTIVITY: VP-30 Fleet Replacement Squadron
LOCATION, UIC: NAS Jacksonville, 65554

TYPES OF MATERIAL OR AID	QTY REQD	DATE REQD	STATUS
Navigator's Plotting Instrument Set (Dividers)	4	Sep 95	Onboard

CIN, COURSE TITLE: D-2D-1107, P-3C NFO (TACCO) Category 4 (Post Command)
TRAINING ACTIVITY: VP-30 Fleet Replacement Squadron
LOCATION, UIC: NAS Jacksonville, 65554

TYPES OF MATERIAL OR AID	QTY REQD	DATE REQD	STATUS
Advanced Multi-Spectral Sensors Job Aid	2	Sep 95	Onboard
AIP Circuit Breaker Book	2	Sep 95	Onboard
ARN-151 GPS Job Aid	2	Sep 95	Onboard
Cat III NFO Student Guide with Appendices	2	Sep 95	Onboard
Commander, Patrol Reconnaissance Wing Atlantic (CPRWL) OSE Gradesheet	2	Sep 95	Onboard
Maverick (Missile) Job Aid	2	Sep 95	Onboard
NAV/COMM Mission Checklists	2	Sep 95	Onboard
P-3 Update III Circuit Breaker Book	2	Sep 95	Onboard
Single Advanced Signal Processor (SASP) Handbook	2	Sep 95	Onboard
TACCO Mission Checklists	2	Sep 95	Onboard

IV.B.2. CURRICULA MATERIALS AND TRAINING AIDS

CIN, COURSE TITLE: D-2D-1101, P-3C Replacement Naval Flight Officer Category 1 (Track D-2D-1111)
TRAINING ACTIVITY: VP-30 Fleet Replacement Squadron
LOCATION, UIC: NAS Jacksonville, 65554

TYPES OF MATERIAL OR AID	QTY REQD	DATE REQD	STATUS
Advanced Multi-Spectral Sensors Job Aid	13	Sep 95	Onboard
AIP Circuit Breaker Book	13	Sep 95	Onboard
Air Navigation Plotter	13	Sep 95	Onboard
ARN-151 GPS Job Aid	13	Sep 95	Onboard
Cat I NFO Student Guide with Appendices	13	Sep 95	Onboard
Commander, Patrol Reconnaissance Wing Atlantic (CPRWL) OSE Gradesheet	13	Sep 95	Onboard
CRT-4 Air Navigation Computer	13	Sep 95	Onboard
NAV/COMM Mission Checklists	13	Sep 95	Onboard
Navigator's Plotting Instrument Set (Dividers)	13	Sep 95	Onboard
P-3 Update III Circuit Breaker Book	13	Sep 95	Onboard
P-3C NAV/COMM Logs	13	Sep 95	Onboard
Single Advanced Signal Processor (SASP) Handbook	13	Sep 95	Onboard

CIN, COURSE TITLE: D-2D-1102, P-3C Replacement Naval Flight Officer Category 3 (Track D-2D-1112)
TRAINING ACTIVITY: VP-30 Fleet Replacement Squadron
LOCATION, UIC: NAS Jacksonville, 65554

TYPES OF MATERIAL OR AID	QTY REQD	DATE REQD	STATUS
Advanced Multi-Spectral Sensors Job Aid	8	Sep 95	Onboard
AIP Circuit Breaker Book	8	Sep 95	Onboard
ARN-151 GPS Job Aid	8	Sep 95	Onboard
Cat III NFO Student Guide with Appendices	8	Sep 95	Onboard
Commander, Patrol Reconnaissance Wing Atlantic (CPRWL) OSE Gradesheet	8	Sep 95	Onboard
Maverick (Missile) Job Aid	8	Sep 95	Onboard
NAV/COMM Mission Checklists	8	Sep 95	Onboard
P-3 Update III Circuit Breaker Book	8	Sep 95	Onboard
Single Advanced Signal Processor (SASP) Handbook	8	Sep 95	Onboard
TACCO Mission Checklists	8	Sep 95	Onboard

CIN, COURSE TITLE: D-2D-1115, P-3C Replacement Naval Flight Officer Category 4 (Prospective Commanding/Executive Officer PCO/PXO) (Track D-2D-1113)
TRAINING ACTIVITY: VP-30 Fleet Replacement Squadron
LOCATION, UIC: NAS Jacksonville, 65554

TYPES OF MATERIAL OR AID	QTY REQD	DATE REQD	STATUS
Advanced Multi-Spectral Sensors Job Aid	2	Sep 95	Onboard
AIP Circuit Breaker Book	2	Sep 95	Onboard
ARN-151 GPS Job Aid	2	Sep 95	Onboard
Cat III NFO Student Guide with Appendices	2	Sep 95	Onboard
Commander, Patrol Reconnaissance Wing Atlantic (CPRWL) OSE Gradesheet	2	Sep 95	Onboard
Maverick (Missile) Job Aid	2	Sep 95	Onboard
NAV/COMM Mission Checklists	2	Sep 95	Onboard
P-3 Update III Circuit Breaker Book	2	Sep 95	Onboard
Single Advanced Signal Processor (SASP) Handbook	2	Sep 95	Onboard
TACCO Mission Checklists	2	Sep 95	Onboard

IV.B.2. CURRICULA MATERIALS AND TRAINING AIDS

CIN, COURSE TITLE: D-050-1002, P-3 Replacement Flight Engineer Category 3 (Track D-050-1008)
TRAINING ACTIVITY: VP-30 Fleet Replacement Squadron
LOCATION, UIC: NAS Jacksonville, 65554

TYPES OF MATERIAL OR AID	QTY REQD	DATE REQD	STATUS
Classroom Instructional System	1	Sep 95	Onboard
Enlarged P-3C Load Adjuster Device #2H103/30	1	Sep 95	Onboard
Enlarged PT Computer Device #ID19B	1	Sep 95	Onboard
Flight Station Job Aid	6	Sep 95	Onboard
P-3C Circuit Breaker Book	6	Sep 95	Onboard
Projector, Overhead	1	Sep 95	Onboard
Student Guide with Appendices	6	Sep 95	Onboard

CIN, COURSE TITLE: D-050-1004, P-3 Replacement Flight Engineer Category 1 (Track D-050-1010)
TRAINING ACTIVITY: VP-30 Fleet Replacement Squadron
LOCATION, UIC: NAS Jacksonville, 65554

TYPES OF MATERIAL OR AID	QTY REQD	DATE REQD	STATUS
Classroom Instructional System	1	Sep 95	Onboard
Enlarged P-3C Load Adjuster Device #2H103/30	1	Sep 95	Onboard
Enlarged PT Computer Device #ID19B	1	Sep 95	Onboard
Flight Station Job Aid	22	Sep 95	Onboard
P-3C Circuit Breaker Book	22	Sep 95	Onboard
Projector, Overhead	1	Sep 95	Onboard
Student Guide with Appendices	22	Sep 95	Onboard

CIN, COURSE TITLE: D-050-1131, P-3C Update III In-Flight Technician Category 1 (Track D-050-1130)
TRAINING ACTIVITY: VP-30 Fleet Replacement Squadron
LOCATION, UIC: NAS Jacksonville, 65554

TYPES OF MATERIAL OR AID	QTY REQD	DATE REQD	STATUS
Dummy Sonobuoy	1	Sep 95	Onboard
In-flight Technician Job Aid	6	Sep 95	Onboard
P-3C Circuit Breaker Book	6	Sep 95	Onboard
Student Guide, P-3C In-Flight Technician	6	Sep 95	Onboard

CIN, COURSE TITLE: D-050-1160, P-3 Series In-Flight Observer (Track D-050-1130)
TRAINING ACTIVITY: VP-30 Fleet Replacement Squadron
LOCATION, UIC: NAS Jacksonville, 65554

TYPES OF MATERIAL OR AID	QTY REQD	DATE REQD	STATUS
Observer Job Aid	27	Sep 95	Onboard
P-3C Circuit Breaker Book	27	Sep 95	Onboard
Student Guide, P-3C In-Flight Technician	27	Sep 95	Onboard

IV.B.2. CURRICULA MATERIALS AND TRAINING AIDS

CIN, COURSE TITLE: D-050-1143, P-3C AIP In-Flight Technician Category 2 (Track D-050-1130)
TRAINING ACTIVITY: VP-30 Fleet Replacement Squadron
LOCATION, UIC: NAS Jacksonville, 65554

TYPES OF MATERIAL OR AID	QTY REQD	DATE REQD	STATUS
Dummy Sonobuoy	1	Aug 96	Onboard
EFDS Job Aid	6	Sep 95	Onboard
In-flight Technician Job Aid	6	Sep 95	Onboard
P-3C Circuit Breaker Book	6	Sep 95	Onboard
Student Guide, P-3C In-Flight Technician	6	Sep 95	Onboard

CIN, COURSE TITLE: D-210-1151, P-3C Replacement Non-Acoustic Equipment Operator Category 1 (Track D-050-1132)
TRAINING ACTIVITY: VP-30 Fleet Replacement Squadron
LOCATION, UIC: NAS Jacksonville, 65554

TYPES OF MATERIAL OR AID	QTY REQD	DATE REQD	STATUS
AIP Job Aid	9	Sep 95	Onboard
Non-Acoustic Grade Book	9	Sep 95	Onboard
Non-Acoustic Inflight Job Aid	9	Sep 95	Onboard
P-3C Circuit Breaker Book	9	Sep 95	Onboard
Student Guide, Non-Acoustic Operator	6	Sep 95	Onboard

CIN, COURSE TITLE: D-050-1134, P-3C AIP In-Flight Technician Instructor Under Training (IUT)
TRAINING ACTIVITY: VP-30 Fleet Replacement Squadron
LOCATION, UIC: NAS Jacksonville, 65554

TYPES OF MATERIAL OR AID	QTY REQD	DATE REQD	STATUS
Dummy Sonobuoy	1	Aug 96	Onboard
Student Guide, P-3C In-Flight Technician	6	Sep 95	Onboard

CIN, COURSE TITLE: D-050-1135, P-3C Update III Non-Acoustic Operator Category 3 (Track D-050-1136)
TRAINING ACTIVITY: VP-30 Fleet Replacement Squadron
LOCATION, UIC: NAS Jacksonville, 65554

TYPES OF MATERIAL OR AID	QTY REQD	DATE REQD	STATUS
AIP Job Aid	4	Sep 95	Onboard
Non-Acoustic Grade Book	4	Sep 95	Onboard
Non-Acoustic Inflight Job Aid	4	Sep 95	Onboard
P-3C Circuit Breaker Book	4	Sep 95	Onboard
Student Guide, Non-Acoustic Operator	6	Sep 95	Onboard

CIN, COURSE TITLE: D-050-1139, P-3C Update III / AIP Replacement Acoustic Operator Category 3 (Track D-050-1140)
TRAINING ACTIVITY: VP-30 Fleet Replacement Squadron
LOCATION, UIC: NAS Jacksonville, 65554

TYPES OF MATERIAL OR AID	QTY REQD	DATE REQD	STATUS
Acoustic In-flight Job Aid	12	Sep 95	Onboard
AIP Job Aid	4	Sep 95	Onboard
P-3C Circuit Breaker Book	4	Sep 95	Onboard
Student Guide, Acoustic Operator	6	Sep 95	Onboard

IV.B.2. CURRICULA MATERIALS AND TRAINING AIDS

Student Guide, Non-Acoustic Operator	1	Aug 96	Onboard

CIN, COURSE TITLE: D-050-1149, P-3C Update III In-Flight Technician Refresher Category 3 (Track D-050-1150)
TRAINING ACTIVITY: VP-30 Fleet Replacement Squadron
LOCATION, UIC: NAS Jacksonville, 65554

TYPES OF MATERIAL OR AID	QTY REQD	DATE REQD	STATUS
Dummy Sonobuoy	1	Aug 96	Onboard

CIN, COURSE TITLE: D-210-1130, P-3C Update III / (AIP) Acoustic Operator Category 1 (Track D-050-1230)
TRAINING ACTIVITY: VP-30 Fleet Replacement Squadron
LOCATION, UIC: NAS Jacksonville, 65554

TYPES OF MATERIAL OR AID	QTY REQD	DATE REQD	STATUS
Acoustic In-flight Job Aid	12	Sep 95	Onboard
AIP Job Aid	12	Sep 95	Onboard
Student Guide, Acoustic Operator	6	Sep 95	Onboard

CIN, COURSE TITLE: D-210-1138, P-3C Update III Acoustic Operator Instructor Under Training (IUT)
TRAINING ACTIVITY: VP-30 Fleet Replacement Squadron
LOCATION, UIC: NAS Jacksonville, 65554

TYPES OF MATERIAL OR AID	QTY REQD	DATE REQD	STATUS
P-3C Circuit Breaker Book	12	Sep 95	Onboard
Student Guide, Acoustic Operator	6	Sep 95	Onboard

CIN, COURSE TITLE: C-102-9586, P-3C Avionics (Initial) Organizational Level Maintenance (Track D-102-1029)
TRAINING ACTIVITY: MTU 1011
LOCATION, UIC: NAMTRAU Jacksonville, 66051

TYPES OF MATERIAL OR AID	QTY REQD	DATE REQD	STATUS
CP-2044 Instructional Graphic Training Device (IGTD)	1	Sep 95	Onboard
Film 803784DN- "ESD: The Invisible Threat"	1	Sep 95	Onboard
Projector, Overhead PS-360-14-LCP	4	Aug 96	Onboard

CIN, COURSE TITLE: C-102-9586, P-3C Avionics (Initial) Organizational Level Maintenance (Track E-102-1029)
TRAINING ACTIVITY: MTU 1012
LOCATION, UIC: NAMTRAU Whidbey Island, 66058

TYPES OF MATERIAL OR AID	QTY REQD	DATE REQD	STATUS
CP-2044 Instructional Graphic Training Device (IGTD)	1	Sep 95	Onboard
Film 803784DN- "ESD: The Invisible Threat"	1	Sep 95	Onboard
Projector, Overhead PS-360-14-LCP	4	Aug 96	Onboard

CIN, COURSE TITLE: C-102-9587, P-3C Avionics (Career) Organizational Level Maintenance (Track D-102-1132)
TRAINING ACTIVITY: MTU 1011
LOCATION, UIC: NAMTRAU Jacksonville, 66051

TYPES OF MATERIAL OR AID	QTY REQD	DATE REQD	STATUS
CP-2044 Instructional Graphic Training Device (IGTD)	1	Sep 95	Onboard

IV.B.2. CURRICULA MATERIALS AND TRAINING AIDS

Film 803784DN- "ESD: The Invisible Threat"	1	Sep 95	Onboard

CIN, COURSE TITLE: C-102-9587, P-3C Avionics (Career) Organizational Level Maintenance (Track E-102-1132)
TRAINING ACTIVITY: MTU 1012
LOCATION, UIC: NAMTRAU Whidbey Island, 66058

TYPES OF MATERIAL OR AID	QTY REQD	DATE REQD	STATUS
CP-2044 Instructional Graphic Training Device (IGTD)	1	Sep 95	Onboard
Film 803784DN- "ESD: The Invisible Threat"	1	Sep 95	Onboard

CIN, COURSE TITLE: C-601-9533, P-3 Power Plant and Related Systems (Career) Organizational Maintenance (Track D-601-1110)
TRAINING ACTIVITY: MTU 1011
LOCATION, UIC: NAMTRAU Jacksonville, 66051

TYPES OF MATERIAL OR AID	QTY REQD	DATE REQD	STATUS
Player Cassette, Video CP-5200U	1	Nov 99	Onboard
Projector Overhead 4A8B	1	Nov 99	Onboard
Receiver, Television UMT-1205-PC	1	Nov 99	Onboard
Transparencies	1 Set	Nov 99	Onboard
Wallchart VSG-280 5001 (T-56 Engine Chart)	1	Nov 99	Onboard

CIN, COURSE TITLE: C-601-9533, P-3 Power Plant and Related Systems (Career) Organizational Maintenance (Track E-601-1110)
TRAINING ACTIVITY: MTU 1012
LOCATION, UIC: NAMTRAU Whidbey Island, 66058

TYPES OF MATERIAL OR AID	QTY REQD	DATE REQD	STATUS
Player Cassette, Video CP-5200U	1	Nov 99	Onboard
Projector Overhead 4A8B	1	Nov 99	Onboard
Receiver, Television UMT-1205-PC	1	Nov 99	Onboard
Transparencies	1 Set	Nov 99	Onboard
Wallchart VSG-280 5001 (T-56 Engine Chart)	1	Nov 99	Onboard

CIN, COURSE TITLE: C-102-3600, P-3 Aircraft Improvement Program Organization Maintenance Course (Track D-102-6719)
TRAINING ACTIVITY: MTU 1011
LOCATION, UIC: NAMTRAU Jacksonville, 66051

TYPES OF MATERIAL OR AID	QTY REQD	DATE REQD	STATUS
Air Mouse	1	Jun 01	Onboard
CAI-CD for AIP Organizational Maintenance Course Introduction	2	Jun 01	Onboard
CAI-CD for AN/AAR-47 Missile Warning System	2	Jun 01	Pending
CAI-CD for AN/AIC-41Intercommunications Set	2	Jun 01	Pending
CAI-CD for AN/ALE-47 Countermeasures Dispensing Set	2	Jun 01	Pending
CAI-CD for AN/ALR-66C(V)3 Electronic Surveillance Measures System	2	Jun 01	Pending
CAI-CD for AN/APS-137B(V)5 Radar Set	2	Jun 01	Pending
CAI-CD for AN/ASX-4 Advanced Imaging Multispectral (AIMS) Display System	2	Jun 01	Pending
CAI-CD for AN/AWG-32(V) Maverick Missile System	2	Jun 01	Onboard
CAI-CD for AN/USQ-78A(V) Display Control Upgrade SASP	2	Jun 01	Onboard

IV.B.2. CURRICULA MATERIALS AND TRAINING AIDS

CAI-CD for Color High Resolution Display (CHRD)	2	Jun 01	Onboard
CAI-CD for Command, Control, Communication and Intelligence (C3I) Suite	2	Jun 01	Onboard
CAI-CD for CP-2339/ASQ-222 Digital Data Computer Set	2	Jun 01	Onboard
CAI-CD for Data Entry Panel (DEP)	2	Jun 01	Onboard
CAI-CD for EP-2060 Pulse Processor	2	Jun 01	Onboard
CAI-CD for Hard Copy Recorder (HCR)	2	Jun 01	Onboard
CAI-CD for Pilot Color High Resolution Display (PCHRD)	2	Jun 01	Onboard
CAI-CD for Replacement Data Storage System (RDSS)	2	Jun 01	Onboard
CAI-CD for Tactical Control Console (TCC)	2	Jun 01	Onboard
CAI-CD for Video Distribution Controller (VDC)	2	Jun 01	Onboard
Color Printer	1	Jun 01	Onboard
Desktop Computer	1	Jun 01	Onboard
Fault Insertion CD for AN/AAR-47 Missile Warning System	2	Jun 01	Onboard
Fault Insertion CD for AN/AIC-41Intercommunications Set	2	Jun 01	Onboard
Fault Insertion CD for AN/ALE-47 Countermeasures Dispensing Set	2	Jun 01	Onboard
Fault Insertion CD for AN/ALR-66C(V)3 Electronic Surveillance Measures Set	2	Jun 01	Onboard
Fault Insertion CD for AN/APS-137(V)5 Radar Set	2	Jun 01	Onboard
Fault Insertion CD for AN/ARN-151 GPS Navigation Set	2	Jun 01	Onboard
Fault Insertion CD for AN/ASX-4 Advanced Imaging Multispectral (AIMS) Display	2	Jun 01	Onboard
Fault Insertion CD for AN/AWG-32 (V)	2	Jun 01	Onboard
Fault Insertion CD for AN/USQ-78A(V) Display Control Upgrade SASP	2	Jun 01	Onboard
Fault Insertion CD for C3I Suite	2	Jun 01	Onboard
Fault Insertion CD for Color High Resolution Display (CHRD)	2	Jun 01	Onboard
Fault Insertion CD for CP-2339/ASQ-222 Digital Data Computer Set	2	Jun 01	Onboard
Fault Insertion CD for Data Entry Panel (DEP)	2	Jun 01	Onboard
Fault Insertion CD for EP-2060 Pulse Analyzer	2	Jun 01	Onboard
Fault Insertion CD for Hard Copy Recorder	2	Jun 01	Onboard
Fault Insertion CD for Pilot Color High Resolution Display (PCHRD)	2	Jun 01	Onboard
Fault Insertion CD for Replacement Data Storage System (RDSS)	2	Jun 01	Onboard
Fault Insertion CD for Tactical Console Console (TCC)	2	Jun 01	Onboard
Fault Insertion CD for Video Display Converter (VDC)	2	Jun 01	Onboard
ICW-CD for AN/AAR-47 Missile Warning System	2	Jun 01	Onboard
ICW-CD for AN/AIC-41Intercommunications Set	2	Jun 01	Onboard
ICW-CD for AN/ALE-47 Countermeasures Dispensing Set	2	Jun 01	Onboard
ICW-CD for AN/ALR-66C(V)3 Electronic Surveillance Measures System	2	Jun 01	Onboard
ICW-CD for AN/APS-137(V)5 Radar Set	2	Jun 01	Onboard
ICW-CD for AN/ARN-151 GPS Navigation Set	2	Jun 01	Onboard
ICW-CD for AN/ASX-4 Advanced Imaging Multispectral (AIMS) Display System	2	Jun 01	Onboard
ICW-CD for AN/AWG-32 (V)	2	Jun 01	Onboard
ICW-CD for AN/USQ-78A(V) Display Control Upgrade SASP	2	Jun 01	Onboard
ICW-CD for C3I Suite	2	Jun 01	Onboard
ICW-CD for Color High Resolution Display (CHRD)	2	Jun 01	Onboard
ICW-CD for CP-2339/ASQ-222	2	Jun 01	Onboard
ICW-CD for Data Entry Panel (DEP)	2	Jun 01	Onboard
ICW-CD for EP-2060 Pulse Analyzer	2	Jun 01	Onboard
ICW-CD for Hard Copy Recorder (HCR)	2	Jun 01	Onboard
ICW-CD for Pilot Color High Resolution Display (PCHRD)	2	Jun 01	Onboard
ICW-CD for Replacement Data Storage System (RDSS)	2	Jun 01	Onboard
ICW-CD for Tactical Control Console (TCC)	2	Jun 01	Onboard
ICW-CD for Video Display Converter (VDC)	2	Jun 01	Onboard
Laptop Computer	1	Jun 01	Onboard

IV.B.2. CURRICULA MATERIALS AND TRAINING AIDS

Learning Analysis Report	2	Jun 01	Onboard
Lesson Plan	4	Jun 01	Onboard
Light Projector MT 820	1	Jun 01	Onboard
Tests	48	Jun 01	Onboard
Trainee Guide, P-3C AIP Career Organizational Maintenance Course	42	Jun 01	Onboard

IV.B.3. TECHNICAL MANUALS

CIN, COURSE TITLE: D-2A-1101, P-3C Update Replacement Pilot Category 1 (Track D-2A-1111)
TRAINING ACTIVITY: VP-30 Fleet Replacement Squadron
LOCATION, UIC : NAS Jacksonville, 65554

TECHNICAL MANUAL NUMBER / TITLE	MEDIUM	QTY REQD	DATE REQD	STATUS
NA 01-75PAC-1 NATOPS Flight Manual, P-3C Aircraft	Hard copy	20	Sep 95	Onboard

CIN, COURSE TITLE: D-2A-1102, P-3C Pilot Category 3 (Track D-2A-1112)
TRAINING ACTIVITY: Aviation Survival Training Center
LOCATION, UIC : NAS Jacksonville, 39862

TECHNICAL MANUAL NUMBER / TITLE	MEDIUM	QTY REQD	DATE REQD	STATUS
NA 01-75PAC-1 NATOPS Flight Manual, P-3C Aircraft	Hard copy	4	Sep 95	Onboard

CIN, COURSE TITLE: D-2B-1105, P-3C Pilot Category 5 (Prospective CO/XO) (Track D-2A-1113)
TRAINING ACTIVITY: VP-30 Fleet Replacement Squadron
LOCATION, UIC : NAS Jacksonville, 65554

TECHNICAL MANUAL NUMBER / TITLE	MEDIUM	QTY REQD	DATE REQD	STATUS
NA 01-75PAC-1 NATOPS Flight Manual, P-3C Aircraft	Hard copy	2	Sep 95	Onboard

CIN, COURSE TITLE: D-2A-1004, P-3C Replacement Pilot (Non-USW) Category 1 (Track D-2A-1115)
TRAINING ACTIVITY: VP-30 Fleet Replacement Squadron
LOCATION, UIC : NAS Jacksonville, 65554

TECHNICAL MANUAL NUMBER / TITLE	MEDIUM	QTY REQD	DATE REQD	STATUS
NA 01-75PAC-1 NATOPS Flight Manual, P-3C Aircraft	Hard copy	4	Sep 95	Onboard

CIN, COURSE TITLE: D-2B-1101, P-3C Replacement Pilot (Non-USW) Category 3 (Track D-2A-1116)
TRAINING ACTIVITY: VP-30 Fleet Replacement Squadron
LOCATION, UIC : NAS Jacksonville, 65554

TECHNICAL MANUAL NUMBER / TITLE	MEDIUM	QTY REQD	DATE REQD	STATUS
NA 01-75PAC-1 NATOPS Flight Manual, P-3C Aircraft	Hard copy	4	Sep 95	Onboard

IV.B.3. TECHNICAL MANUALS

CIN, COURSE TITLE: D-2D-1107, P-3C NFO (TACCO) Category 4 (Post Command)
TRAINING ACTIVITY: VP-30 Fleet Replacement Squadron
LOCATION, UIC : NAS Jacksonville, 65554

TECHNICAL MANUAL NUMBER / TITLE	MEDIUM	QTY REQD	DATE REQD	STATUS
ACP-165 Operational Brevity Codes	Hard copy	2	Apr 98	Onboard
ACP-25 Communications Instructions Radiotelephone Procedures	Hard copy	2	Sep 95	Onboard
ATP-28(A) Allied Antisubmarine Warfare Manual	Hard copy	2	Sep 95	Onboard
AUTEC Overview Brief and Range Safety Manual	Hard copy	2	Sep 95	Onboard
AXP-5B Navy/Air	Hard copy	2	Sep 95	Onboard
CMBB Consolidated Maritime Brief Book	Hard copy	2	Sep 95	Onboard
CPRW-11 TORPEX Brief Book	Hard copy	2	Sep 95	Onboard
CPRWL Flight Communications Handbook	Hard copy	2	Sep 95	Onboard
DAMA Guide Demand Assigned Multiple Access Guide	Hard copy	2	Sep 95	Onboard
DCMS Crew Interface Manual, Telephonics (20March1995)	Hard copy	2	Sep 95	Onboard
ELINT Parameter Limits List (EPL)	Hard copy	2	Sep 95	Onboard
ELINT Mil Sup Parameter Limits List (EPL), Military Supplement	Hard copy	2	Sep 95	Onboard
Jane's All the Worlds Aircraft	Hard copy	2	Sep 95	Onboard
Jane's Fighting Ships	Hard copy	2	Sep 95	Onboard

IV.B.3. TECHNICAL MANUALS

MWP-24-1-1 Principles of LOFARGram Analysis (SECRET/NOFORN)	Hard copy	2	Sep 95	Onboard
NA 01-75PAC-1.1 NFO/Aircrew NATOPS Flight Manual, P-3C Aircraft	Hard copy	2	Sep 95	Onboard
NA 01-75PAC-1.1 Supplement NATOPS Flight Manual Supplement (AIP), P-3C Upgrade AIP Aircraft	Hard copy	2	Apr 98	Onboard
NA 01-75PAC-11-6-22 TACCO Software Reference Manual (SRM), P-3C Aircraft	Hard copy	2	Sep 95	Onboard
NA 01-75PAC-11-6-23 TACCO Inflight Handbook, P-3C Aircraft	Hard copy	2	Sep 95	Onboard
NA 01-75PAC-11-6-24 NAV/COMM Inflight Handbook, P-3C Aircraft	Hard copy	2	Sep 95	Onboard
NA 01-75PAC-12-2 Crew Station Maintenance Organizational, Tactical Coordinator Station, P-3C Aircraft	Hard copy	2	Sep 95	Onboard
NA 01-75PAI-11-6-27 Inflight Handbook, TACCO/NAV/COMM/IFT, P-3C AIP Aircraft	Hard copy	2	Apr 98	Onboard
NA 01-75PAI-12-2 Crew Station Maintenance Organizational, Tactical Coordinator Station, P-3C AIP Aircraft	Hard copy	2	Apr 98	Onboard
NAVEDTRA 12800 Radioman 3	Hard copy	2	Sep 95	Onboard
Nuclear Submarines Acoustic Characteristics of Type 2-3 Nuclear Submarines	Hard copy	2	Sep 95	Onboard
NWP-1-10.1 Tactical Action Officer (TAO) Handbook	Hard copy	2	Sep 95	Onboard
NWP-24-4 Foreign Submarine Data Handbook (SECRET/NOFORN)	Hard copy	2	Sep 95	Onboard
NWP-3-20.5 NA 01-75-PAA-IT P-3 Tactical Manual (CONFIDENTIAL)	Hard copy	2	Sep 95	Onboard
NWP-55-2-2 (Rev G) Tactical Airborne Information Document (TACAID), (CONFIDENTIAL)	Hard copy	2	Sep 95	Onboard

IV.B.3. TECHNICAL MANUALS

OASIS III System Operators Manual	Hard copy	2	Sep 95	Onboard
OPNAV 3710.7 OPNAV Instructions	Hard copy	2	Sep 95	Onboard
OTH-T Guide Over The Horizon Targeting	Hard copy	2	Sep 95	Onboard
TRAP/TADIXS TRAP/TADIXS Users Guide	Hard copy	2	Sep 95	Onboard
VX-1 AIP OPTEVFOR Tactics Guide	Hard copy	2	Sep 95	Onboard

CIN, COURSE TITLE: D-2D-1101, P-3C Replacement Naval Flight Officer Category 1 (Track D-2D-1111)
TRAINING ACTIVITY: VP-30 Fleet Replacement Squadron
LOCATION, UIC : NAS Jacksonville, 65554

TECHNICAL MANUAL NUMBER / TITLE	MEDIUM	QTY REQD	DATE REQD	STATUS
ACP-165 Operational Brevity Codes	Hard copy	13	Apr 98	Onboard
ACP-25 Communications Instructions Radiotelephone Procedures	Hard copy	13	Sep 95	Onboard
ATP-28(A) Allied Antisubmarine Warfare Manual	Hard copy	13	Sep 95	Onboard
AUTEC Overview Brief and Range Safety Manual	Hard copy	13	Sep 95	Onboard
AXP-5B Navy/Air	Hard copy	13	Sep 95	Onboard
CMBB Consolidated Maritime Brief Book	Hard copy	13	Sep 95	Onboard
CPRW-11 TORPEX Brief Book	Hard copy	13	Sep 95	Onboard
CPRWL Flight Communications Handbook	Hard copy	13	Sep 95	Onboard
DCMS Crew Interface Manual, Telephonics (20March1995)	Hard copy	13	Sep 95	Onboard

IV.B.3. TECHNICAL MANUALS

Jane's All the Worlds Aircraft	Hard copy	13	Sep 95	Onboard
Jane's Fighting Ships	Hard copy	13	Sep 95	Onboard
NA 01-75PAC-1 NATOPS Flight Manual, P-3C Aircraft	Hard copy	13	Sep 95	Onboard
NA 01-75PAC-1.1 NFO/Aircrew NATOPS Flight Manual, P-3C Aircraft	Hard copy	13	Sep 95	Onboard
NA 01-75PAC-1.1 Supplement NATOPS Flight Manual Supplement (AIP), P-3C Upgrade AIP Aircraft	Hard copy	13	Apr 98	Onboard
NA 01-75PAC-11-6-22 TACCO Software Reference Manual (SRM), P-3C Aircraft	Hard copy	13	Sep 95	Onboard
NA 01-75PAC-11-6-23 TACCO Inflight Handbook, P-3C Aircraft	Hard copy	13	Sep 95	Onboard
NA 01-75PAC-11-6-24 NAV/COMM Inflight Handbook, P-3C Aircraft	Hard copy	13	Sep 95	Onboard
NA 01-75PAC-12-3 Crew Station Maintenance Organizational, Navigation/Communication Station, P-3C Aircraft	Hard copy	13	Apr 98	Onboard
NA 01-75PAI-11-6-27 Inflight Handbook, TACCO/NAV/COMM/IFT, P-3C AIP Aircraft	Hard copy	13	Apr 98	Onboard
NA 01-75PAI-12-3 Crew Station Maintenance Organizational, Navigation/Communication Station, P-3C AIP Aircraft	Hard copy	13	Apr 98	Onboard
NAVEDTRA 12800 Radioman 3	Hard copy	13	Sep 95	Onboard
NWP-3-20.5 NA 01-75-PAA-IT P-3 Tactical Manual (CONFIDENTIAL)	Hard copy	13	Sep 95	Onboard
NWP-55-2-2 (Rev G) Tactical Airborne Information Document (TACAID), (CONFIDENTIAL)	Hard copy	13	Sep 95	Onboard
OASIS III System Operators Manual	Hard copy	13	Sep 95	Onboard

IV.B.3. TECHNICAL MANUALS

OPNAV 3710.7 OPNAV Instructions	Hard copy	13	Sep 95	Onboard
TRAP/TADIXS TRAP/TADIXS Users Guide	Hard copy	13	Sep 95	Onboard

CIN, COURSE TITLE: D-2D-1102, P-3C Replacement Naval Flight Officer Category 3 (Track D-2D-1112)
TRAINING ACTIVITY: VP-30 Fleet Replacement Squadron
LOCATION, UIC : NAS Jacksonville, 65554

TECHNICAL MANUAL NUMBER / TITLE	MEDIUM	QTY REQD	DATE REQD	STATUS
ACP-165 Operational Brevity Codes	Hard copy	8	Sep 95	Onboard
ACP-25 Communications Instructions Radiotelephone Procedures	Hard copy	8	Sep 95	Onboard
ATP-28(A) Allied Antisubmarine Warfare Manual	Hard copy	8	Sep 95	Onboard
AUTEC Overview Brief and Range Safety Manual	Hard copy	8	Sep 95	Onboard
AXP-5B Navy/Air	Hard copy	8	Sep 95	Onboard
CMBB Consolidated Maritime Brief Book	Hard copy	8	Sep 95	Onboard
CPRW-11 TORPEX Brief Book	Hard copy	8	Sep 95	Onboard
CPRWL Flight Communications Handbook	Hard copy	8	Sep 95	Onboard
DAMA Guide Demand Assigned Multiple Access Guide	Hard copy	8	Sep 95	Onboard
DCMS Crew Interface Manual, Telephonics (20March1995)	Hard copy	8	Sep 95	Onboard
ELINT Parameter Limits List (EPL)	Hard copy	8	Sep 95	Onboard
ELINT Mil Sup Parameter Limits List (EPL), Military Supplement	Hard copy	8	Sep 95	Onboard

IV.B.3. TECHNICAL MANUALS

Jane's All the Worlds Aircraft	Hard copy	8	Sep 95	Onboard
Jane's Fighting Ships	Hard copy	8	Sep 95	Onboard
MWP-24-1-1 Principles of LOFARGram Analysis (SECRET/NOFORN)	Hard copy	8	Sep 95	Onboard
NA 01-75PAC-1.1 NFO/Aircrew NATOPS Flight Manual, P-3C Aircraft	Hard copy	8	Sep 95	Onboard
NA 01-75PAC-1.1 Supplement NATOPS Flight Manual Supplement (AIP), P-3C Upgrade AIP Aircraft	Hard copy	8	Sep 95	Onboard
NA 01-75PAC-11-6-22 TACCO Software Reference Manual (SRM), P-3C Aircraft	Hard copy	8	Sep 95	Onboard
NA 01-75PAC-11-6-23 TACCO Inflight Handbook, P-3C Aircraft	Hard copy	8	Sep 95	Onboard
NA 01-75PAC-11-6-24 NAV/COMM Inflight Handbook, P-3C Aircraft	Hard copy	8	Sep 95	Onboard
NA 01-75PAC-12-2 Crew Station Maintenance Organizational, Tactical Coordinator Station, P-3C Aircraft	Hard copy	8	Sep 95	Onboard
NA 01-75PAI-11-6-27 Inflight Handbook, TACCO/NAV/COMM/IFT, P-3C AIP Aircraft	Hard copy	8	Sep 95	Onboard
NA 01-75PAI-12-2 Crew Station Maintenance Organizational, Tactical Coordinator Station, P-3C AIP Aircraft	Hard copy	8	Sep 95	Onboard
NAVEDTRA 12800 Radioman 3	Hard copy	8	Sep 95	Onboard
Nuclear Submarines Acoustic Characteristics of Type 2-3 Nuclear Submarines	Hard copy	8	Sep 95	Onboard
NWP-1-10.1 Tactical Action Officer (TAO) Handbook	Hard copy	8	Sep 95	Onboard
NWP-24-4 Foreign Submarine Data Handbook (SECRET/NOFORN)	Hard copy	8	Sep 95	Onboard

IV.B.3. TECHNICAL MANUALS

NWP-3-20.5 NA 01-75-PAA-IT P-3 Tactical Manual (CONFIDENTIAL)	Hard copy	8	Sep 95	Onboard
NWP-55-2-2 (Rev G) Tactical Airborne Information Document (TACAID), (CONFIDENTIAL)	Hard copy	8	Sep 95	Onboard
OASIS III System Operators Manual	Hard copy	8	Sep 95	Onboard
OPNAV 3710.7 OPNAV Instructions	Hard copy	8	Sep 95	Onboard
OTH-T Guide Over The Horizon Targeting	Hard copy	8	Sep 95	Onboard
TRAP/TADIXS TRAP/TADIXS Users Guide	Hard copy	8	Sep 95	Onboard

CIN, COURSE TITLE: D-2D-1115, P-3C Replacement Naval Flight Officer Category 4 (Prospective Commanding/Executive Officer PCO/PXO) (Track D-2D-1113)
TRAINING ACTIVITY: VP-30 Fleet Replacement Squadron
LOCATION, UIC : NAS Jacksonville, 65554

TECHNICAL MANUAL NUMBER / TITLE	MEDIUM	QTY REQD	DATE REQD	STATUS
ACP-165 Operational Brevity Codes	Hard copy	2	Apr 98	Onboard
ACP-25 Communications Instructions Radiotelephone Procedures	Hard copy	2	Sep 95	Onboard
ATP-28(A) Allied Antisubmarine Warfare Manual	Hard copy	2	Sep 95	Onboard
AUTEC Overview Brief and Range Safety Manual	Hard copy	2	Sep 95	Onboard
AXP-5B Navy/Air	Hard copy	2	Sep 95	Onboard
CMBB Consolidated Maritime Brief Book	Hard copy	2	Sep 95	Onboard
CPRW-11 TORPEX Brief Book	Hard copy	2	Sep 95	Onboard

IV.B.3. TECHNICAL MANUALS

CPRWL Flight Communications Handbook	Hard copy	2	Sep 95	Onboard
DAMA Guide Demand Assigned Multiple Access Guide	Hard copy	2	Sep 95	Onboard
DCMS Crew Interface Manual, Telephonics (20March1995)	Hard copy	2	Sep 95	Onboard
ELINT Parameter Limits List (EPL)	Hard copy	2	Sep 95	Onboard
ELINT Mil Sup Parameter Limits List (EPL), Military Supplement	Hard copy	2	Sep 95	Onboard
Jane's Fighting Ships	Hard copy	2	Sep 95	Onboard
Jane's All the Worlds Aircraft	Hard copy	2	Sep 95	Onboard
MWP-24-1-1 Principles of LOFARGram Analysis (SECRET/NOFORN)	Hard copy	2	Sep 95	Onboard
NA 01-75PAC-1.1 NFO/Aircrew NATOPS Flight Manual, P-3C Aircraft	Hard copy	2	Sep 95	Onboard
NA 01-75PAC-1.1 Supplement NATOPS Flight Manual Supplement (AIP), P-3C Upgrade AIP Aircraft	Hard copy	2	Apr 98	Onboard
NA 01-75PAC-11-6-22 TACCO Software Reference Manual (SRM), P-3C Aircraft	Hard copy	2	Sep 95	Onboard
NA 01-75PAC-11-6-23 TACCO Inflight Handbook, P-3C Aircraft	Hard copy	2	Sep 95	Onboard
NA 01-75PAC-11-6-24 NAV/COMM Inflight Handbook, P-3C Aircraft	Hard copy	2	Sep 95	Onboard
NA 01-75PAC-12-2 Crew Station Maintenance Organizational, Tactical Coordinator Station, P-3C Aircraft	Hard copy	2	Sep 95	Onboard
NA 01-75PAI-11-6-27 Inflight Handbook, TACCO/NAV/COMM/IFT, P-3C AIP Aircraft	Hard copy	2	Apr 98	Onboard

IV.B.3. TECHNICAL MANUALS

NAVEDTRA 12800 Radioman 3	Hard copy	2	Sep 95	Onboard
Nuclear Submarines Acoustic Characteristics of Type 2-3 Nuclear Submarines	Hard copy	2	Sep 95	Onboard
NWP-1-10.1 Tactical Action Officer (TAO) Handbook	Hard copy	2	Sep 95	Onboard
NWP-24-4 Foreign Submarine Data Handbook (SECRET/NOFORN)	Hard copy	2	Sep 95	Onboard
NWP-3-20.5 NA 01-75-PAA-IT P-3 Tactical Manual (CONFIDENTIAL)	Hard copy	2	Sep 95	Onboard
NWP-55-2-2 (Rev G) Tactical Airborne Information Document (TACAID), (CONFIDENTIAL)	Hard copy	2	Sep 95	Onboard
OASIS III System Operators Manual	Hard copy	2	Sep 95	Onboard
OPNAV 3710.7 OPNAV Instructions	Hard copy	2	Sep 95	Onboard
OTH-T Guide Over The Horizon Targeting	Hard copy	2	Sep 95	Onboard
TRAP/TADIXS TRAP/TADIXS Users Guide	Hard copy	2	Sep 95	Onboard
VX-1 AIP OPTEVFOR Tactics Guide	Hard copy	2	Sep 95	Onboard

CIN, COURSE TITLE: D-050-1002, P-3 Replacement Flight Engineer Category 3 (Track D-050-1008)
TRAINING ACTIVITY: VP-30 Fleet Replacement Squadron
LOCATION, UIC : NAS Jacksonville, 65554

TECHNICAL MANUAL NUMBER / TITLE	MEDIUM	QTY REQD	DATE REQD	STATUS
NA 00-8T-80 Aerodynamics for Naval Aviators Manual	Hard copy	6	Sep 95	Onboard
NA 01-1B-40 Weight and Balance Manual	Hard copy	6	Sep 95	Onboard
NA 01-75PAA-6-1 Preflight/Turnaround Checklist, P-3C Aircraft	Hard copy	6	Sep 95	Onboard

IV.B.3. TECHNICAL MANUALS

NA 01-75PAC-1 NATOPS Flight Manual, P-3C Aircraft	Hard copy	6	Sep 95	Onboard
NA 11-1-107 Maintenance Manual for Flight Engineers	Hard copy	6	Sep 95	Onboard
NA 28-SSQ-500 Maintenance Manual for Flight Engineers	Hard copy	6	Sep 95	Onboard

CIN, COURSE TITLE: D-050-1004, P-3 Replacement Flight Engineer Category 1 (Track D-050-1010)
TRAINING ACTIVITY: VP-30 Fleet Replacement Squadron
LOCATION, UIC : NAS Jacksonville, 65554

TECHNICAL MANUAL NUMBER / TITLE	MEDIUM	QTY REQD	DATE REQD	STATUS
NA 00-8T-80 Aerodynamics for Naval Aviators Manual	Hard copy	22	Sep 95	Onboard
NA 01-1B-40 Weight and Balance Manual	Hard copy	22	Sep 95	Onboard
NA 01-75PAA-6-1 Preflight/Turnaround Checklist, P-3C Aircraft	Hard copy	22	Sep 95	Onboard
NA 01-75PAC-1 NATOPS Flight Manual, P-3C Aircraft	Hard copy	22	Sep 95	Onboard
NA 11-1-107 Maintenance Manual for Flight Engineers	Hard copy	22	Sep 95	Onboard
NA 28-SSQ-500 Maintenance Manual for Flight Engineers	Hard copy	22	Sep 95	Onboard

CIN, COURSE TITLE: D-050-1131, P-3C Update III In-Flight Technician Category 1 (Track D-050-1130)
TRAINING ACTIVITY: VP-30 Fleet Replacement Squadron
LOCATION, UIC : NAS Jacksonville, 65554

TECHNICAL MANUAL NUMBER / TITLE	MEDIUM	QTY REQD	DATE REQD	STATUS
NA 01-1A-8 Engineering Manual Series, Aircraft and Missile Repair, Structural Hardware	Hard copy	6	Sep 95	Onboard
NA 01-75PA-75 Airborne Weapons/Stores Loading Manual, P-3 Aircraft	Hard copy	6	Sep 95	Onboard
NA 01-75PAC-1.1 NFO/Aircrew NATOPS Flight Manual, P-3C Aircraft	Hard copy	6	Sep 95	Onboard

IV.B.3. TECHNICAL MANUALS

NA 01-75PAC-15 Connector and Wire Repair Procedures	Hard copy	6	Sep 95	Onboard
NA 01-75PAC-2 Series Systems Wiring Diagram Manuals	Hard copy	6	Sep 95	Onboard
NA 01-75PAC-4-1 Organizational Maintenance with Illustrated Parts Breakdown, Introduction, Numerical and Reference Designations, P-3C Aircraft	Hard copy	6	Sep 95	Onboard
NA 01-75PAC-4-9 Illustrated Parts Breakdown, P-3C Aircraft	Hard copy	6	Sep 95	Onboard
NA 01-75PAI-11-6-16 Tactical Coordinator, Navigator Communicator and Inflight Technician, A4.7.A1, P-3C AIP Aircraft	Hard copy	6	Apr 98	Onboard
NA 01-75PAI-12 Crew Station Maintenance Organizational, Technician Station, P-3C AIP Aircraft	Hard copy	6	Apr 98	Onboard
NA 01-75PAI-12-1 Crew Station Maintenance Organizational, Flight Station, P-3C AIP Aircraft	Hard copy	6	Apr 98	Onboard
NA 01-75PAI-12-10 Crew Station Maintenance Organizational, System Test Program CP-2339/ASQ-222V Station, P-3C AIP Aircraft	Hard copy	6	Apr 98	Onboard
NA 01-75PAI-12-2 Crew Station Maintenance Organizational, Tactical Coordinator Station, P-3C AIP Aircraft	Hard copy	6	Apr 98	Onboard
NA 01-75PAI-12-3 Crew Station Maintenance Organizational, Navigation/Communication Station, P-3C AIP Aircraft	Hard copy	6	Apr 98	Onboard
NA 01-75PAI-12-5 Crew Station Maintenance Organizational, Sensor Station 3, P-3C AIP Aircraft	Hard copy	6	Apr 98	Onboard
NA 01-75PAI-12-6 Crew Station Maintenance Organizational, Armament Ordnance Station, P-3C AIP Aircraft	Hard copy	6	Apr 98	Onboard
NA 01-75PAI-12-8 Crew Station Maintenance Organizational, Sensor Station 1 and 2 Update III, P-3C AIP Aircraft	Hard copy	6	Apr 98	Onboard

IV.B.3. TECHNICAL MANUALS

NA 01-75PAI-12-9 Crew Station Maintenance Organizational, System Test Program for Advanced Signal Processor	Hard copy	6	Sep 95	Onboard
NA 01-75PAI-2-10 Maintenance Instructions Organizational, Navigation/Communication Station, P-3C AIP Aircraft	Hard copy	6	Apr 98	Onboard
NA 01-75PAI-2-11 Maintenance Instructions Organizational, Integrated Ordnance Station, P-3C AIP Aircraft	Hard copy	6	Apr 98	Onboard
NA 01-75PAI-2-15 Maintenance Instructions Organizational, Integrated SS1/2 (SASP), P-3C AIP Aircraft	Hard copy	6	Apr 98	Onboard
NA 01-75PAI-2-5 Maintenance Instructions Organizational Integrated Technician, P-3C AIP Aircraft	Hard copy	6	Apr 98	Onboard
NA 01-75PAI-2-6 Maintenance Instructions Organizational Integrated TACCO Station, P-3C AIP Aircraft	Hard copy	6	Apr 98	Onboard
NA 01-75PAI-2-8 Maintenance Instructions Organizational, Integrated SS3 Station, P-3C AIP Aircraft	Hard copy	6	Apr 98	Onboard
NA 01-75PAI-2-9 Maintenance Instructions Organizational Integrated Flight Station, P-3C AIP Aircraft	Hard copy	6	Apr 98	Onboard
NA 16-30ASQ212-1 Organizational Maintenance, Digital Computer Set, AN/ULQ-16(V)2	Hard copy	6	Sep 95	Onboard
OPNAVINST 4790.2 (series) Naval Aviation Maintenance Program	Hard copy	6	Sep 95	Onboard

CIN, COURSE TITLE: D-050-1160, P-3 Series In-Flight Observer (Track D-050-1130)
TRAINING ACTIVITY: VP-30 Fleet Replacement Squadron
LOCATION, UIC : NAS Jacksonville, 65554

TECHNICAL MANUAL NUMBER / TITLE	MEDIUM	QTY REQD	DATE REQD	STATUS
NA 01-75PAC-1.1 NFO/Aircrew NATOPS Flight Manual, P-3C Aircraft	Hard copy	27	Sep 95	Onboard

IV.B.3. TECHNICAL MANUALS

OPNAVINST 4790.2 (series) Naval Aviation Maintenance Program	Hard copy	27	Sep 95	Onboard

CIN, COURSE TITLE: D-050-1143, P-3C AIP In-Flight Technician Category 2 (Track D-050-1130)
TRAINING ACTIVITY: VP-30 Fleet Replacement Squadron
LOCATION, UIC : NAS Jacksonville, 65554

TECHNICAL MANUAL NUMBER / TITLE	MEDIUM	QTY REQD	DATE REQD	STATUS
NA 01-1A-8 Engineering Manual Series, Aircraft and Missile Repair, Structural Hardware	Hard copy	6	Apr 98	Onboard
NA 01-75PA-75 Airborne Weapons/Stores Loading Manual, P-3 Aircraft	Hard copy	6	Apr 98	Onboard
NA 01-75PAC-1.1 NFO/Aircrew NATOPS Flight Manual, P-3C Aircraft	Hard copy	6	Apr 98	Onboard
NA 01-75PAC-15 Connector and Wire Repair Procedures	Hard copy	6	Sep 95	Onboard
NA 01-75PAC-2 Series Systems Wiring Diagram Manuals	Hard copy	6	Apr 98	Onboard
NA 01-75PAC-4-1 Organizational Maintenance with Illustrated Parts Breakdown, Introduction, Numerical and Reference Designations, P-3C Aircraft	Hard copy	6	Apr 98	Onboard
NA 01-75PAC-4-9 Illustrated Parts Breakdown, P-3C Aircraft	Hard copy	6	Apr 98	Onboard
NA 01-75PAI-11-6-19 Inflight Handbook, Inflight Technician, A4.7.E, P-3C Update III Aircraft	Hard copy	6	Apr 98	Onboard
NA 01-75PAI-12 Crew Station Maintenance Organizational, Technician Station, P-3C AIP Aircraft	Hard copy	6	Apr 98	Onboard
NA 01-75PAI-12-1 Crew Station Maintenance Organizational, Flight Station, P-3C AIP Aircraft	Hard copy	6	Apr 98	Onboard
NA 01-75PAI-12-10 Crew Station Maintenance Organizational, System Test Program CP-2339/ASQ-222V Station, P-3C AIP Aircraft	Hard copy	6	Apr 98	Onboard

IV.B.3. TECHNICAL MANUALS

NA 01-75PAI-12-2 Crew Station Maintenance Organizational, Tactical Coordinator Station, P-3C AIP Aircraft	Hard copy	6	Apr 98	Onboard
NA 01-75PAI-12-3 Crew Station Maintenance Organizational, Navigation/Communication Station, P-3C AIP Aircraft	Hard copy	6	Apr 98	Onboard
NA 01-75PAI-12-5 Crew Station Maintenance Organizational, Sensor Station 3, P-3C AIP Aircraft	Hard copy	6	Apr 98	Onboard
NA 01-75PAI-12-6 Crew Station Maintenance Organizational, Armament Ordnance Station, P-3C AIP Aircraft	Hard copy	6	Apr 98	Onboard
NA 01-75PAI-12-8 Crew Station Maintenance Organizational, Sensor Station 1 and 2 Update III, P-3C AIP Aircraft	Hard copy	6	Apr 98	Onboard
NA 01-75PAI-12-9 Crew Station Maintenance Organizational, System Test Program for Advanced Signal Processor	Hard copy	6	Apr 98	Onboard
NA 01-75PAI-2-10 Maintenance Instructions Organizational, Navigation/Communication Station, P-3C AIP Aircraft	Hard copy	6	Apr 98	Onboard
NA 01-75PAI-2-11 Maintenance Instructions Organizational, Integrated Ordnance Station, P-3C AIP Aircraft	Hard copy	6	Apr 98	Onboard
NA 01-75PAI-2-15 Maintenance Instructions Organizational, Integrated SS1/2 (SASP), P-3C AIP Aircraft	Hard copy	6	Apr 98	Onboard
NA 01-75PAI-2-5 Maintenance Instructions Organizational Integrated Technician, P-3C AIP Aircraft	Hard copy	6	Apr 98	Onboard
NA 01-75PAI-2-6 Maintenance Instructions Organizational Integrated TACCO Station, P-3C AIP Aircraft	Hard copy	6	Apr 98	Onboard
NA 01-75PAI-2-8 Maintenance Instructions Organizational, Integrated SS3 Station, P-3C AIP Aircraft	Hard copy	6	Apr 98	Onboard

IV.B.3. TECHNICAL MANUALS

NA 01-75PAI-2-9 Maintenance Instructions Organizational Integrated Flight Station, P-3C AIP Aircraft	Hard copy	6	Apr 98	Onboard
OPNAVINST 4790.2 (series) Naval Aviation Maintenance Program	Hard copy	6	Apr 98	Onboard

CIN, COURSE TITLE: D-210-1151, P-3C Replacement Non-Acoustic Equipment Operator Category 1 (Track D-050-1132)
TRAINING ACTIVITY: VP-30 Fleet Replacement Squadron
LOCATION, UIC : NAS Jacksonville, 65554

TECHNICAL MANUAL NUMBER / TITLE	MEDIUM	QTY REQD	DATE REQD	STATUS
ATP-28(A) Allied Antisubmarine Warfare Manual	Hard copy	9	Apr 98	Onboard
ELINT Parameter Limits List (EPL)	Hard copy	9	Apr 98	Onboard
Grimes Aerospace, Model 400 Maintenance Manual with Illustrated Parts Breakdown, Pilot Color High Resolution Display (PCHRD)	Hard copy	9	Apr 98	Onboard
Jane's Fighting Ships	Hard copy	9	Apr 98	Onboard
NA 01-75PAC-1.1 NFO/Aircrew NATOPS Flight Manual, P-3C Aircraft	Hard copy	9	Apr 98	Onboard
NA 01-75PAC-1.1 Supplement NATOPS Flight Manual Supplement (AIP), P-3C Upgrade AIP Aircraft	Hard copy	9	Apr 98	Onboard
NA 01-75PAC-11-5-3 Inflight Handbook, SS-3 A4.7E, P-3C Update III Aircraft	Hard copy	9	Apr 98	Onboard
NA 01-75PAC-12-5 Crew Station Maintenance Organizational, Sensor Station 3, P-3C Aircraft	Hard copy	9	Apr 98	Onboard
NWP-1-10.1 Tactical Action Officer (TAO) Handbook	Hard copy	9	Apr 98	Onboard
NWP-3-20.5 NA 01-75-PAA-IT P-3 Tactical Manual (CONFIDENTIAL)	Hard copy	9	Apr 98	Onboard

IV.B.3. TECHNICAL MANUALS

NWP-55-2-2 (Rev G) Tactical Airborne Information Document (TACAID), (CONFIDENTIAL)	Hard copy	9	Apr 98	Onboard

CIN, COURSE TITLE: D-050-1135, P-3C Update III Non-Acoustic Operator Category 3 (Track D-050-1136)
TRAINING ACTIVITY: VP-30 Fleet Replacement Squadron
LOCATION, UIC : NAS Jacksonville, 65554

TECHNICAL MANUAL NUMBER / TITLE	MEDIUM	QTY REQD	DATE REQD	STATUS
ATP-28(A) Allied Antisubmarine Warfare Manual	Hard copy	4	Sep 95	Onboard
ELINT Parameter Limits List (EPL)	Hard copy	4	Sep 95	Onboard
Grimes Aerospace, Model 400 Maintenance Manual with Illustrated Parts Breakdown, Pilot Color High Resolution Display (PCHRD)	Hard copy	4	Sep 95	Onboard
Jane's Fighting Ships	Hard copy	4	Sep 95	Onboard
NA 01-75PAC-1.1 NFO/Aircrew NATOPS Flight Manual, P-3C Aircraft	Hard copy	4	Sep 95	Onboard
NA 01-75PAC-1.1 Supplement NATOPS Flight Manual Supplement (AIP), P-3C Upgrade AIP Aircraft	Hard copy	4	Apr 98	Onboard
NA 01-75PAC-11-5-3 Inflight Handbook, SS-3 A4.7E, P-3C Update III Aircraft	Hard copy	4	Sep 95	Onboard
NA 01-75PAC-12-5 Crew Station Maintenance Organizational, Sensor Station 3, P-3C Aircraft	Hard copy	4	Sep 95	Onboard
NWP-1-10.1 Tactical Action Officer (TAO) Handbook	Hard copy	4	Sep 95	Onboard
NWP-3-20.5 NA 01-75-PAA-IT P-3 Tactical Manual (CONFIDENTIAL)	Hard copy	4	Sep 95	Onboard
NWP-55-2-2 (Rev G) Tactical Airborne Information Document (TACAID), (CONFIDENTIAL)	Hard copy	4	Sep 95	Onboard

IV.B.3. TECHNICAL MANUALS

CIN, COURSE TITLE: D-050-1139, P-3C Update III / AIP Replacement Acoustic Operator Category 3 (Track D-050-1140)
TRAINING ACTIVITY: VP-30 Fleet Replacement Squadron
LOCATION, UIC : NAS Jacksonville, 65554

TECHNICAL MANUAL NUMBER / TITLE	MEDIUM	QTY REQD	DATE REQD	STATUS
MWP-24-1-1 Principles of LOFARGram Analysis (SECRET/NOFORN)	Hard copy	4	Sep 95	Onboard
NA 01-75PAC-1.1 NFO/Aircrew NATOPS Flight Manual, P-3C Aircraft	Hard copy	4	Sep 95	Onboard
NA 01-75PAC-1.1 Supplement NATOPS Flight Manual Supplement (AIP), P-3C Upgrade AIP Aircraft	Hard copy	4	Apr 98	Onboard
NA 01-75PAC-12-8 Crew Station Maintenance Organizational, Sensor Station 1 and 2 Update III, P-3C Aircraft	Hard copy	4	Sep 95	Onboard
NWP-16 (Rev A) Passive Acoustic Classification Manual (Mar 92) (SECRET/NOFORN)	Hard copy	4	Sep 95	Onboard
NWP-24-1-2 Principles of LOFARgram Analysis (SECRET/NOFORN)	Hard copy	4	Apr 98	Onboard
NWP-24-2 (Rev A) Signature Catalog: CIS Diesel and Nuclear Submarines (Oct 92) (SECRET/NOFORN)	Hard copy	4	Sep 95	Onboard
NWP-24-4 Foreign Submarine Data Handbook (SECRET/NOFORN)	Hard copy	4	Sep 95	Onboard
NWP-3-20.5 NA 01-75-PAA-IT P-3 Tactical Manual (CONFIDENTIAL)	Hard copy	4	Sep 95	Onboard
NWP-55-2-2 (Rev G) Tactical Airborne Information Document (TACAID), (CONFIDENTIAL)	Hard copy	4	Sep 95	Onboard

IV.B.3. TECHNICAL MANUALS

CIN, COURSE TITLE: D-050-1149, P-3C Update III In-Flight Technician Refresher Category 3 (Track D-050-1150)
TRAINING ACTIVITY: VP-30 Fleet Replacement Squadron
LOCATION, UIC : NAS Jacksonville, 65554

TECHNICAL MANUAL NUMBER / TITLE	MEDIUM	QTY REQD	DATE REQD	STATUS
NA 01-1A-8 Engineering Manual Series, Aircraft and Missile Repair, Structural Hardware	Hard copy	4	Sep 95	Onboard
NA 01-75PAA-75 Airborne Weapons/Stores Loading Manual, P-3 Aircraft	Hard copy	4	Sep 95	Onboard
NA 01-75PAC-12 Crew Station Maintenance Organizational, Technician, P-3C Aircraft	Hard copy	4	Sep 95	Onboard
NA 01-75PAC-12-1 Crew Station Maintenance Organizational, Flight Station, P-3C Aircraft	Hard copy	4	Sep 95	Onboard
NA 01-75PAC-12-10 Crew Station Maintenance Organizational, System Test Program for CP-2044/ASQ-212	Hard copy	15	Sep 95	Onboard
NA 01-75PAC-12-2 Crew Station Maintenance Organizational, Tactical Coordinator Station, P-3C Aircraft	Hard copy	4	Sep 95	Onboard
NA 01-75PAC-12-3 Crew Station Maintenance Organizational, Navigation/Communication Station, P-3C Aircraft	Hard copy	4	Sep 95	Onboard
NA 01-75PAC-12-4 Crew Station Maintenance Organizational, SS1/2 Station, P-3C Aircraft	Hard copy	4	Sep 95	Onboard
NA 01-75PAC-12-5 Crew Station Maintenance Organizational, Sensor Station 3, P-3C Aircraft	Hard copy	4	Sep 95	Onboard
NA 01-75PAC-12-6 Crew Station Maintenance Organizational, Armament Ordnance Station, P-3C Aircraft	Hard copy	4	Sep 95	Onboard
NA 01-75PAC-12-7 Crew Station Maintenance Organizational, STP Station, P-3C Aircraft	Hard copy	8	Sep 95	Onboard

IV.B.3. TECHNICAL MANUALS

NA 01-75PAC-12-8 Crew Station Maintenance Organizational, Sensor Station 1 and 2 Update III, P-3C Aircraft	Hard copy	4	Sep 95	Onboard
NA 01-75PAC-12-9 Crew Station Maintenance Organizational, System Test Program for Advanced Signal Processor	Hard copy	4	Sep 95	Onboard
NA 01-75PAC-15 Connector and Wire Repair Procedures	Hard copy	4	Sep 95	Onboard
NA 01-75PAC-2 Series Systems Wiring Diagram Manuals	Hard copy	4	Sep 95	Onboard
NA 01-75PAC-2-10 Maintenance Instructions Organizational, Integrated Navigation/Communication Station, P-3C Aircraft	Hard copy	4	Sep 95	Onboard
NA 01-75PAC-2-11 Maintenance Instructions Organizational, Integrated Armament/Ordnance System, P-3C Aircraft	Hard copy	4	Sep 95	Onboard
NA 01-75PAC-2-15 Maintenance Instructions Organizational, Integrated Sensor Stations 1 and 2 Update III, P-3C Aircraft	Hard copy	4	Sep 95	Onboard
NA 01-75PAC-2-5 Maintenance Instructions Organizational, Integrated Technician Station, P-3C Aircraft	Hard copy	4	Sep 95	Onboard
NA 01-75PAC-2-6 Maintenance Instructions Organizational, Integrated Tactical Coordinator Station, P-3C Aircraft	Hard copy	4	Sep 95	Onboard
NA 01-75PAC-2-7 Maintenance Instructions Organizational, Integrated Sensor Stations 1 and 2, P-3C Aircraft	Hard copy	4	Sep 95	Onboard
NA 01-75PAC-2-8 Maintenance Instructions Organizational, Integrated Sensor Station 3, P-3C Aircraft	Hard copy	4	Sep 95	Onboard
NA 01-75PAC-2-9 Maintenance Instructions Organizational, Integrated Flight Station Systems, P-3C Aircraft	Hard copy	4	Sep 95	Onboard

IV.B.3. TECHNICAL MANUALS

NA 01-75PAC-4-1 Organizational Maintenance with Illustrated Parts Breakdown, Introduction, Numerical and Reference Designations, P-3C Aircraft	Hard copy	4	Sep 95	Onboard
NA 01-75PAC-4-9 Illustrated Parts Breakdown, P-3C Aircraft	Hard copy	4	Sep 95	Onboard
NA 01-75PAI-11-6-19 Inflight Handbook, Inflight Technician, A4.7.E, P-3C Update III Aircraft	Hard copy	4	Sep 95	Onboard
NA 16-30ASQ212-1 Organizational Maintenance, Digital Computer Set, AN/ULQ-16(V)2	Hard copy	4	Sep 95	Onboard
OPNAVINST 4790.2 (series) Naval Aviation Maintenance Program	Hard copy	4	Sep 95	Onboard

CIN, COURSE TITLE: D-210-1130, P-3C Update III / (AIP) Acoustic Operator Category 1 (Track D-050-1230)
TRAINING ACTIVITY: VP-30 Fleet Replacement Squadron
LOCATION, UIC : NAS Jacksonville, 65554

TECHNICAL MANUAL NUMBER / TITLE	MEDIUM	QTY REQD	DATE REQD	STATUS
MWP-24-1-1 Principles of LOFARGram Analysis (SECRET/NOFORN)	Hard copy	12	Apr 98	Onboard
NA 01-75PAC-1.1 NFO/Aircrew NATOPS Flight Manual, P-3C Aircraft	Hard copy	12	Apr 98	Onboard
NA 01-75PAC-1.1 Supplement NATOPS Flight Manual Supplement (AIP), P-3C Upgrade AIP Aircraft	Hard copy	12	Apr 98	Onboard
NA 01-75PAC-12-8 Crew Station Maintenance Organizational, Sensor Station 1 and 2 Update III, P-3C Aircraft	Hard copy	12	Apr 98	Onboard
NWP-16 (Rev A) Passive Acoustic Classification Manual (Mar 92) (SECRET/NOFORN)	Hard copy	12	Apr 98	Onboard
NWP-24-1-2 Principles of LOFARgram Analysis (SECRET/NOFORN)	Hard copy	12	Apr 98	Onboard
NWP-24-2 (Rev A) Signature Catalog: CIS Diesel and Nuclear Submarines (Oct 92) (SECRET/NOFORN)	Hard copy	12	Sep 95	Onboard

IV.B.3. TECHNICAL MANUALS

NWP-24-4 Foreign Submarine Data Handbook (SECRET/NOFORN)	Hard copy	12	Apr 98	Onboard
NWP-3-20.5 NA 01-75-PAA-IT P-3 Tactical Manual (CONFIDENTIAL)	Hard copy	12	Apr 98	Onboard
NWP-55-2-2 (Rev G) Tactical Airborne Information Document (TACAID), (CONFIDENTIAL)	Hard copy	12	Apr 98	Onboard

CIN, COURSE TITLE: C-102-9586, P-3C Avionics (Initial) Organizational Level Maintenance (Track D-102-1029)
TRAINING ACTIVITY: MTU 1011
LOCATION, UIC : NAMTRAU Jacksonville, 66051

TECHNICAL MANUAL NUMBER / TITLE	MEDIUM	QTY REQD	DATE REQD	STATUS
0002 Material Safety Data Sheet: Isopropyl Alcohol, TT-I-735, or authorized substitute	Hard copy	1	Sep 95	Onboard
523-0777257-00121R Rockwell International, Operator's Manual, Control Display Navigation Unit	Hard copy	1	Sep 95	Onboard
CNETINST 1500.20 series Safety Procedures for Conducting Training in Arduous or Potentially High Risk Activities	Hard copy	15	Sep 95	Onboard
DOD-HDBK-263 Electrostatic Discharge Control Handbook	Hard copy	15	Sep 95	Onboard
DOD-SSTD 1686 Electrostatic Discharge Control Program	Hard copy	15	Sep 95	Onboard
DSEG88-HB05 P-3C ISAR System, Organizational Maintenance Manual	Hard copy	15	Sep 95	Onboard
HG05-EG85 P-3C Interim RADAR System Operator's Manual, P-3C ISAR AN/APS-137(V)2	Hard copy	15	Sep 95	Onboard
NA 01-1A-23 Technical Manual, Standard Maintenance Practices Electronic Assembly Repair	Hard copy	15	Sep 99	Onboard
NA 01-75PAA-2-15 Technical Manual, Organizational Maintenance, Connector and Wire Repair Procedures, P-3A/B/C and EP-3E Aircraft	Hard copy	1	Sep 95	Onboard

IV.B.3. TECHNICAL MANUALS

NA 01-75PAC-1.1 NFO/Aircrew NATOPS Flight Manual, P-3C Aircraft	Hard copy	15	Sep 95	Onboard
NA 01-75PAC-12 Crew Station Maintenance Organizational, Technician, P-3C Aircraft	Hard copy	15	Sep 95	Onboard
NA 01-75PAC-12-1 Crew Station Maintenance Organizational, Flight Station, P-3C Aircraft	Hard copy	15	Sep 95	Onboard
NA 01-75PAC-12-10 Crew Station Maintenance Organizational, System Test Program for CP-2044/ASQ-212	Hard copy	15	Sep 95	Onboard
NA 01-75PAC-12-2 Crew Station Maintenance Organizational, Tactical Coordinator Station, P-3C Aircraft	Hard copy	15	Sep 95	Onboard
NA 01-75PAC-12-3 Crew Station Maintenance Organizational, Navigation/Communication Station, P-3C Aircraft	Hard copy	15	Sep 95	Onboard
NA 01-75PAC-12-5 Crew Station Maintenance Organizational, Sensor Station 3, P-3C Aircraft	Hard copy	15	Sep 95	Onboard
NA 01-75PAC-12-6 Crew Station Maintenance Organizational, Armament Ordnance Station, P-3C Aircraft	Hard copy	15	Nov 95	Onboard
NA 01-75PAC-12-8 Crew Station Maintenance Organizational, Sensor Station 1 and 2 Update III, P-3C Aircraft	Hard copy	15	Sep 95	Onboard
NA 01-75PAC-12-9 Crew Station Maintenance Organizational, System Test Program for Advanced Signal Processor	Hard copy	15	Sep 95	Onboard
NA 01-75PAC-2-10 Maintenance Instructions Organizational, Integrated Navigation/Communication Station, P-3C Aircraft	Hard copy	15	Sep 95	Onboard
NA 01-75PAC-2-15 Maintenance Instructions Organizational, Integrated Sensor Stations 1 and 2 Update III, P-3C Aircraft	Hard copy	15	Sep 95	Onboard

IV.B.3. TECHNICAL MANUALS

NA 01-75PAC-2-5 Maintenance Instructions Organizational, Integrated Technician Station, P-3C Aircraft	Hard copy	15	Sep 95	Onboard
NA 01-75PAC-2-6 Maintenance Instructions Organizational, Integrated Tactical Coordinator Station, P-3C Aircraft	Hard copy	15	Sep 95	Onboard
NA 01-75PAC-2-7 Maintenance Instructions Organizational, Integrated Sensor Stations 1 and 2, P-3C Aircraft	Hard copy	15	Sep 95	Onboard
NA 01-75PAC-2-8 Maintenance Instructions Organizational, Integrated Sensor Station 3, P-3C Aircraft	Hard copy	15	Sep 95	Onboard
NA 01-75PAC-2-9 Maintenance Instructions Organizational, Integrated Flight Station Systems, P-3C Aircraft	Hard copy	15	Sep 95	Onboard
NA 16-30ASQ212-1 Organizational Maintenance, Digital Computer Set, AN/ULQ-16(V)2	Hard copy	15	Sep 95	Onboard
NA 19-600-99-6-1 Preoperational Checklist Manual, Bomb Hoist, AERO-14C	Hard copy	15	Sep 95	Onboard
NA 19-600-99-6-2 Technical Manual, Periodic Maintenance Requirements Manual, Manual Bomb Hoist, AERO-14C	Hard copy	15	Sep 95	Onboard
OPNAVINST 5100.19C Navy Occupational Safety and Health Program Manual for Forces Afloat (Volume I)	Hard copy	1	Sep 95	Onboard
OPNAVINST 5100.23C Navy Occupational Safety & Health Program Manual	Hard copy	1	Sep 95	Onboard

CIN, COURSE TITLE: C-602-3573, P-3 Connector and Wiring Repair Organizational Maintenance (Track D-102-1029)
TRAINING ACTIVITY: MTU 1011
LOCATION, UIC : NAMTRAU Jacksonville, 66051

TECHNICAL MANUAL NUMBER / TITLE	MEDIUM	QTY REQD	DATE REQD	STATUS
NA 01-1A-505 Installation Practices, Aircraft Electric and Electronic Wiring	Hard copy	10	Sep 95	Onboard

IV.B.3. TECHNICAL MANUALS

NA 01-75PAA-2-19 Maintenance Instructions, Organizational, Transmission Line Testing, P-3A/B/C Aircraft	Hard copy	15	Sep 95	Onboard
NA 01-75PAA-8 Technical Manual, Work Unit Code Manual, P-3 Series	Hard copy	10	Sep 95	Onboard
NA 01-75PAC-2-9.1 Maintenance Instructions Organizational, Integrated Flight Station Wiring Data, P-3C Aircraft	Hard copy	10	Sep 95	Onboard
NA 01-75PAC-4-1 Organizational Maintenance with Illustrated Parts Breakdown, Introduction, Numerical and Reference Designations, P-3C Aircraft	Hard copy	10	Sep 95	Onboard
NA 01-75PAC-4-7 Organizational Maintenance with Illustrated Parts Breakdown, Electrical and Instrument Systems, P-3 Aircraft	Hard copy	10	Sep 95	Onboard

CIN, COURSE TITLE: C-102-9586, P-3C Avionics (Initial) Organizational Level Maintenance (Track E-102-1029)
TRAINING ACTIVITY: MTU 1012
LOCATION, UIC : NAMTRAU Whidbey Island, 66058

TECHNICAL MANUAL NUMBER / TITLE	MEDIUM	QTY REQD	DATE REQD	STATUS
0002 Material Safety Data Sheet: Isopropyl Alcohol, TT-I-735, or authorized substitute	Hard copy	1	Sep 95	Onboard
523-0777257-00121R Rockwell International, Operator's Manual, Control Display Navigation Unit	Hard copy	1	Sep 95	Onboard
CNETINST 1500.20 series Safety Procedures for Conducting Training in Arduous or Potentially High Risk Activities	Hard copy	15	Sep 95	Onboard
DOD-HDBK-263 Electrostatic Discharge Control Handbook	Hard copy	15	Sep 95	Onboard
DOD-SSTD 1686 Electrostatic Discharge Control Program	Hard copy	15	Sep 95	Onboard
DSEG88-HB05 P-3C ISAR System, Organizational Maintenance Manual	Hard copy	15	Sep 95	Onboard

IV.B.3. TECHNICAL MANUALS

HG05-EG85 P-3C Interim RADAR System Operator's Manual, P-3C ISAR AN/APS-137(V)2	Hard copy	15	Sep 95	Onboard
NA 01-1A-23 Technical Manual, Standard Maintenance Practices Electronic Assembly Repair	Hard copy	15	Sep 95	Onboard
NA 01-75PAA-2-15 Technical Manual, Organizational Maintenance, Connector and Wire Repair Procedures, P-3A/B/C and EP-3E Aircraft	Hard copy	1	Sep 95	Onboard
NA 01-75PAC-1.1 NFO/Aircrew NATOPS Flight Manual, P-3C Aircraft	Hard copy	15	Sep 95	Onboard
NA 01-75PAC-12 Crew Station Maintenance Organizational, Technician, P-3C Aircraft	Hard copy	15	Sep 95	Onboard
NA 01-75PAC-12-1 Crew Station Maintenance Organizational, Flight Station, P-3C Aircraft	Hard copy	15	Sep 95	Onboard
NA 01-75PAC-12-10 Crew Station Maintenance Organizational, System Test Program for CP-2044/ASQ-212	Hard copy	15	Sep 95	Onboard
NA 01-75PAC-12-2 Crew Station Maintenance Organizational, Tactical Coordinator Station, P-3C Aircraft	Hard copy	15	Sep 95	Onboard
NA 01-75PAC-12-3 Crew Station Maintenance Organizational, Navigation/Communication Station, P-3C Aircraft	Hard copy	15	Sep 95	Onboard
NA 01-75PAC-12-5 Crew Station Maintenance Organizational, Sensor Station 3, P-3C Aircraft	Hard copy	15	Sep 95	Onboard
NA 01-75PAC-12-6 Crew Station Maintenance Organizational, Armament Ordnance Station, P-3C Aircraft	Hard copy	15	Sep 95	Onboard
NA 01-75PAC-12-8 Crew Station Maintenance Organizational, Sensor Station 1 and 2 Update III, P-3C Aircraft	Hard copy	15	Sep 95	Onboard

IV.B.3. TECHNICAL MANUALS

NA 01-75PAC-12-9 Crew Station Maintenance Organizational, System Test Program for Advanced Signal Processor	Hard copy	15	Sep 95	Onboard
NA 01-75PAC-2-10 Maintenance Instructions Organizational, Integrated Navigation/Communication Station, P-3C Aircraft	Hard copy	15	Sep 95	Onboard
NA 01-75PAC-2-15 Maintenance Instructions Organizational, Integrated Sensor Stations 1 and 2 Update III, P-3C Aircraft	Hard copy	15	Sep 95	Onboard
NA 01-75PAC-2-5 Maintenance Instructions Organizational, Integrated Technician Station, P-3C Aircraft	Hard copy	15	Sep 95	Onboard
NA 01-75PAC-2-6 Maintenance Instructions Organizational, Integrated Tactical Coordinator Station, P-3C Aircraft	Hard copy	15	Sep 95	Onboard
NA 01-75PAC-2-7 Maintenance Instructions Organizational, Integrated Sensor Stations 1 and 2, P-3C Aircraft	Hard copy	15	Sep 95	Onboard
NA 01-75PAC-2-8 Maintenance Instructions Organizational, Integrated Sensor Station 3, P-3C Aircraft	Hard copy	15	Sep 95	Onboard
NA 01-75PAC-2-9 Maintenance Instructions Organizational, Integrated Flight Station Systems, P-3C Aircraft	Hard copy	15	Sep 95	Onboard
NA 16-30ASQ212-1 Organizational Maintenance, Digital Computer Set, AN/ULQ-16(V)2	Hard copy	15	Sep 95	Onboard
NA 19-600-99-6-1 Preoperational Checklist Manual, Bomb Hoist, AERO-14C	Hard copy	15	Sep 95	Onboard
NA 19-600-99-6-2 Technical Manual, Periodic Maintenance Requirements Manual, Manual Bomb Hoist, AERO-14C	Hard copy	15	Sep 95	Onboard
OPNAVINST 5100.19C Navy Occupational Safety and Health Program Manual for Forces Afloat (Volume I)	Hard copy	1	Sep 95	Onboard

IV.B.3. TECHNICAL MANUALS

OPNAVINST 5100.23C Navy Occupational Safety & Health Program Manual	Hard copy	1	Sep 95	Onboard
VX-1 AIP OPTEVFOR Tactics Guide	Hard copy	8	Sep 95	Onboard

CIN, COURSE TITLE: C-602-3573, P-3 Connector and Wiring Repair Organizational Maintenance (Track E-102-1029)
TRAINING ACTIVITY: MTU 1012
LOCATION, UIC : NAMTRAU Whidbey Island, 66058

TECHNICAL MANUAL NUMBER / TITLE	MEDIUM	QTY REQD	DATE REQD	STATUS
NA 01-1A-505 Installation Practices, Aircraft Electric and Electronic Wiring	Hard copy	10	Sep 95	Onboard
NA 01-75PAA-2-19 Maintenance Instructions, Organizational, Transmission Line Testing, P-3A/B/C Aircraft	Hard copy	15	Sep 95	Onboard
NA 01-75PAA-8 Technical Manual, Work Unit Code Manual, P-3 Series	Hard copy	10	Sep 95	Onboard
NA 01-75PAC-2-9.1 Maintenance Instructions Organizational, Integrated Flight Station Wiring Data, P-3C Aircraft	Hard copy	10	Sep 95	Onboard
NA 01-75PAC-4-1 Organizational Maintenance with Illustrated Parts Breakdown, Introduction, Numerical and Reference Designations, P-3C Aircraft	Hard copy	10	Sep 95	Onboard
NA 01-75PAC-4-7 Organizational Maintenance with Illustrated Parts Breakdown, Electrical and Instrument Systems, P-3 Aircraft	Hard copy	10	Sep 95	Onboard

CIN, COURSE TITLE: C-102-9587, P-3C Avionics (Career) Organizational Level Maintenance (Track D-102-1132)
TRAINING ACTIVITY: MTU 1011
LOCATION, UIC : NAMTRAU Jacksonville, 66051

TECHNICAL MANUAL NUMBER / TITLE	MEDIUM	QTY REQD	DATE REQD	STATUS
0002 Material Safety Data Sheet: Isopropyl Alcohol, TT-I-735, or authorized substitute	Hard copy	1	Sep 95	Onboard
334AS100 Technical Manual Description, Principles of Operation and Maintenance Instructions, Bore Scope Kit, Part No. 334AS100	Hard copy	15	Sep 95	Onboard

IV.B.3. TECHNICAL MANUALS

523-0777257-00121R Rockwell International, Operator's Manual, Control Display Navigation Unit	Hard copy	1	Sep 95	Onboard
CNETINST 1500.20 series Safety Procedures for Conducting Training in Arduous or Potentially High Risk Activities	Hard copy	15	Sep 95	Onboard
DOD-HDBK-263 Electrostatic Discharge Control Handbook	Hard copy	15	Sep 95	Onboard
DOD-SSTD 1686 Electrostatic Discharge Control Program	Hard copy	15	Sep 95	Onboard
NA 01-1A-23 Technical Manual, Standard Maintenance Practices Electronic Assembly Repair	Hard copy	15	Sep 95	Onboard
NA 01-75PAA-2-15 Technical Manual, Organizational Maintenance, Connector and Wire Repair Procedures, P-3A/B/C and EP-3E Aircraft	Hard copy	1	Sep 95	Onboard
NA 01-75PAA-2-19 Maintenance Instructions, Organizational, Transmission Line Testing, P-3A/B/C Aircraft	Hard copy	15	Nov 95	Onboard
NA 01-75PAC-1 NATOPS Flight Manual, P-3C Aircraft	Hard copy	15	Sep 95	Onboard
NA 01-75PAC-1.1 NFO/Aircrew NATOPS Flight Manual, P-3C Aircraft	Hard copy	15	Sep 95	Onboard
NA 01-75PAC-12 Crew Station Maintenance Organizational, Technician, P-3C Aircraft	Hard copy	15	Nov 95	Onboard
NA 01-75PAC-12-10 Crew Station Maintenance Organizational, System Test Program for CP-2044/ASQ-212	Hard copy	15	Nov 95	Onboard
NA 01-75PAC-12-2 Crew Station Maintenance Organizational, Tactical Coordinator Station, P-3C Aircraft	Hard copy	15	Sep 95	Onboard
NA 01-75PAC-12-3 Crew Station Maintenance Organizational, Navigation/Communication Station, P-3C Aircraft	Hard copy	15	Sep 95	Onboard

IV.B.3. TECHNICAL MANUALS

NA 01-75PAC-12-5 Crew Station Maintenance Organizational, Sensor Station 3, P-3C Aircraft	Hard copy	15	Sep 95	Onboard
NA 01-75PAC-12-8 Crew Station Maintenance Organizational, Sensor Station 1 and 2 Update III, P-3C Aircraft	Hard copy	15	Sep 95	Onboard
NA 01-75PAC-12-9 Crew Station Maintenance Organizational, System Test Program for Advanced Signal Processor	Hard copy	15	Sep 95	Onboard
NA 01-75PAC-2-10 Maintenance Instructions Organizational, Integrated Navigation/Communication Station, P-3C Aircraft	Hard copy	15	Sep 95	Onboard
NA 01-75PAC-2-15 Maintenance Instructions Organizational, Integrated Sensor Stations 1 and 2 Update III, P-3C Aircraft	Hard copy	15	Sep 95	Onboard
NA 01-75PAC-2-5 Maintenance Instructions Organizational, Integrated Technician Station, P-3C Aircraft	Hard copy	15	Sep 95	Onboard
NA 01-75PAC-2-6 Maintenance Instructions Organizational, Integrated Tactical Coordinator Station, P-3C Aircraft	Hard copy	15	Sep 95	Onboard
NA 01-75PAC-2-8 Maintenance Instructions Organizational, Integrated Sensor Station 3, P-3C Aircraft	Hard copy	15	Sep 95	Onboard
NA 01-75PAC-2-9 Maintenance Instructions Organizational, Integrated Flight Station Systems, P-3C Aircraft	Hard copy	15	Sep 95	Onboard
NA 16-30ASQ212-1 Organizational Maintenance, Digital Computer Set, AN/ULQ-16(V)2	Hard copy	15	Sep 95	Onboard
NA 16-35MX10667-1 Operational and Organizational Maintenance Instruction with Illustrated Parts Breakdown	Hard copy	15	Sep 95	Onboard
NA 17-35CX-3 Technical Manual, Line RADAR Altimeter and Warning System Test Set	Hard copy	15	Sep 95	Onboard

IV.B.3. TECHNICAL MANUALS

NA 19-600-99-6-1 Preoperational Checklist Manual, Bomb Hoist, AERO-14C	Hard copy	15	Sep 95	Onboard
NA 19-600-99-6-2 Technical Manual, Periodic Maintenance Requirements Manual, Manual Bomb Hoist, AERO-14C	Hard copy	15	Sep 95	Onboard
OPNAVINST 5100.19C Navy Occupational Safety and Health Program Manual for Forces Afloat (Volume I)	Hard copy	1	Sep 95	Onboard
OPNAVINST 5100.23C Navy Occupational Safety & Health Program Manual	Hard copy	1	Sep 95	Onboard

CIN, COURSE TITLE: C-102-9587, P-3C Avionics (Career) Organizational Level Maintenance (Track E-102-1132)
TRAINING ACTIVITY: MTU 1012
LOCATION, UIC : NAMTRAU Whidbey Island, 66058

TECHNICAL MANUAL NUMBER / TITLE	MEDIUM	QTY REQD	DATE REQD	STATUS
0002 Material Safety Data Sheet: Isopropyl Alcohol, TT-I-735, or authorized substitute	Hard copy	1	Sep 95	Onboard
334AS100 Technical Manual Description, Principles of Operation and Maintenance Instructions, Bore Scope Kit, Part No. 334AS100	Hard copy	15	Sep 95	Onboard
523-0777257-00121R Rockwell International, Operator's Manual, Control Display Navigation Unit	Hard copy	1	Sep 95	Onboard
CNETINST 1500.20 series Safety Procedures for Conducting Training in Arduous or Potentially High Risk Activities	Hard copy	15	Sep 95	Onboard
DOD-HDBK-263 Electrostatic Discharge Control Handbook	Hard copy	15	Sep 95	Onboard
DOD-SSTD 1686 Electrostatic Discharge Control Program	Hard copy	15	Sep 95	Onboard
NA 01-1A-23 Technical Manual, Standard Maintenance Practices Electronic Assembly Repair	Hard copy	15	Sep 95	Onboard

IV.B.3. TECHNICAL MANUALS

NA 01-75PAA-2-15 Technical Manual, Organizational Maintenance, Connector and Wire Repair Procedures, P-3A/B/C and EP-3E Aircraft	Hard copy	1	Sep 95	Onboard
NA 01-75PAA-2-19 Maintenance Instructions, Organizational, Transmission Line Testing, P-3A/B/C Aircraft	Hard copy	15	Nov 95	Onboard
NA 01-75PAC-1 NATOPS Flight Manual, P-3C Aircraft	Hard copy	15	Sep 95	Onboard
NA 01-75PAC-1.1 NFO/Aircrew NATOPS Flight Manual, P-3C Aircraft	Hard copy	15	Sep 95	Onboard
NA 01-75PAC-12 Crew Station Maintenance Organizational, Technician, P-3C Aircraft	Hard copy	15	Nov 95	Onboard
NA 01-75PAC-12-10 Crew Station Maintenance Organizational, System Test Program for CP-2044/ASQ-212	Hard copy	15	Nov 95	Onboard
NA 01-75PAC-12-2 Crew Station Maintenance Organizational, Tactical Coordinator Station, P-3C Aircraft	Hard copy	15	Sep 95	Onboard
NA 01-75PAC-12-3 Crew Station Maintenance Organizational, Navigation/Communication Station, P-3C Aircraft	Hard copy	15	Sep 95	Onboard
NA 01-75PAC-12-5 Crew Station Maintenance Organizational, Sensor Station 3, P-3C Aircraft	Hard copy	15	Sep 95	Onboard
NA 01-75PAC-12-8 Crew Station Maintenance Organizational, Sensor Station 1 and 2 Update III, P-3C Aircraft	Hard copy	15	Sep 95	Onboard
NA 01-75PAC-12-9 Crew Station Maintenance Organizational, System Test Program for Advanced Signal Processor	Hard copy	15	Sep 95	Onboard
NA 01-75PAC-2-10 Maintenance Instructions Organizational, Integrated Navigation/Communication Station, P-3C Aircraft	Hard copy	15	Sep 95	Onboard

IV.B.3. TECHNICAL MANUALS

NA 01-75PAC-2-15 Maintenance Instructions Organizational, Integrated Sensor Stations 1 and 2 Update III, P-3C Aircraft	Hard copy	15	Sep 95	Onboard
NA 01-75PAC-2-5 Maintenance Instructions Organizational, Integrated Technician Station, P-3C Aircraft	Hard copy	15	Sep 95	Onboard
NA 01-75PAC-2-6 Maintenance Instructions Organizational, Integrated Tactical Coordinator Station, P-3C Aircraft	Hard copy	15	Sep 95	Onboard
NA 01-75PAC-2-8 Maintenance Instructions Organizational, Integrated Sensor Station 3, P-3C Aircraft	Hard copy	15	Sep 95	Onboard
NA 01-75PAC-2-9 Maintenance Instructions Organizational, Integrated Flight Station Systems, P-3C Aircraft	Hard copy	15	Sep 95	Onboard
NA 16-30ASQ212-1 Organizational Maintenance, Digital Computer Set, AN/ULQ-16(V)2	Hard copy	15	Sep 95	Onboard
NA 16-35MX10667-1 Operational and Organizational Maintenance Instruction with Illustrated Parts Breakdown	Hard copy	15	Sep 95	Onboard
NA 17-35CX-3 Technical Manual, Line RADAR Altimeter and Warning System Test Set	Hard copy	15	Sep 95	Onboard
NA 19-600-99-6-1 Preoperational Checklist Manual, Bomb Hoist, AERO-14C	Hard copy	15	Sep 95	Onboard
NA 19-600-99-6-2 Technical Manual, Periodic Maintenance Requirements Manual, Manual Bomb Hoist, AERO-14C	Hard copy	15	Sep 95	Onboard
OPNAVINST 5100.19C Navy Occupational Safety and Health Program Manual for Forces Afloat (Volume I)	Hard copy	1	Sep 95	Onboard
OPNAVINST 5100.23C Navy Occupational Safety & Health Program Manual	Hard copy	1	Sep 95	Onboard

IV.B.3. TECHNICAL MANUALS

CIN, COURSE TITLE: C-601-9532, P-3 Power Plant and Related Systems (Initial) Organizational Maintenance (Track D-601-1011)
TRAINING ACTIVITY: MTU 1011
LOCATION, UIC : NAMTRAU Jacksonville, 66051

TECHNICAL MANUAL NUMBER / TITLE	MEDIUM	QTY REQD	DATE REQD	STATUS
NA 01-75PAA-2-1 General Information and Servicing, P-3 Series Aircraft	Hard copy	8	Sep 95	Onboard
NA 01-75PAA-2-4 General Information and Servicing, P-3 Series Aircraft	Hard copy	8	Sep 95	Onboard
NA 01-75PAA-2-4.2 Maintenance Instructions, Organizational, Over-the-wing Turbine Change Task Cards, P-3A/B/C Aircraft	Hard copy	8	Sep 95	Onboard
NA 01-75PAA-2-4.3 Maintenance Instructions, Organizational, Powerplant, P-3A/B/C Aircraft	Hard copy	8	Sep 95	Onboard
NA 01-75PAA-2-4.4 Maintenance Instructions, Organizational, Auxiliary Power Unit, P-3A/B/C Aircraft	Hard copy	8	Sep 95	Onboard
NA 01-75PAA-2-4.5 Maintenance Instructions, Organizational, Powerplant Quick Engine Change Assembly, P-3A/B/C Aircraft	Hard copy	8	Sep 95	Onboard
NA 01-75PAA-2-4.6 Maintenance Instructions, Organizational, Propeller, P-3A/B/C Aircraft	Hard copy	8	Sep 95	Onboard
NA 01-75PAA-2-4.7 Maintenance Instructions, Organizational, Aircraft Fuel System, P-3A/B/C Aircraft	Hard copy	8	Sep 95	Onboard
NA 01-75PAA-6 Periodic Maintenance Information Cards, P-3 Series Aircraft	Hard copy	8	Sep 95	Onboard
NA 01-75PAA-6-3 Daily/Servicing/Special/Conditional Inspections, P-3A/B/C Aircraft	Hard copy	8	Sep 95	Onboard
NA 01-75PAA-6-4 Phased Maintenance Requirements Cards, P-3A/B/C Aircraft	Hard copy	8	Sep 95	Onboard
NA 01-75PAA-6-5 Sequence Control Charts, P-3C Aircraft	Hard copy	8	Sep 95	Onboard

IV.B.3. TECHNICAL MANUALS

NA 01-75PAA-8 Technical Manual, Work Unit Code Manual, P-3 Series	Hard copy	8	Sep 95	Onboard
OPNAVINST 4790.2 (series) Naval Aviation Maintenance Program	Hard copy	8	Sep 95	Onboard

CIN, COURSE TITLE: C-601-9532, P-3 Power Plant and Related Systems (Initial) Organizational Maintenance (Track E-601-1011)
TRAINING ACTIVITY: MTU 1012
LOCATION, UIC : NAMTRAU Whidbey Island, 66058

TECHNICAL MANUAL NUMBER / TITLE	MEDIUM	QTY REQD	DATE REQD	STATUS
NA 01-75PAA-2-1 General Information and Servicing, P-3 Series Aircraft	Hard copy	8	Sep 95	Onboard
NA 01-75PAA-2-4 General Information and Servicing, P-3 Series Aircraft	Hard copy	8	Sep 95	Onboard
NA 01-75PAA-2-4.2 Maintenance Instructions, Organizational, Over-the-wing Turbine Change Task Cards, P-3A/B/C Aircraft	Hard copy	8	Sep 95	Onboard
NA 01-75PAA-2-4.3 Maintenance Instructions, Organizational, Powerplant, P-3A/B/C Aircraft	Hard copy	8	Sep 95	Onboard
NA 01-75PAA-2-4.4 Maintenance Instructions, Organizational, Auxiliary Power Unit, P-3A/B/C Aircraft	Hard copy	8	Sep 95	Onboard
NA 01-75PAA-2-4.5 Maintenance Instructions, Organizational, Powerplant Quick Engine Change Assembly, P-3A/B/C Aircraft	Hard copy	8	Sep 95	Onboard
NA 01-75PAA-2-4.6 Maintenance Instructions, Organizational, Propeller, P-3A/B/C Aircraft	Hard copy	8	Sep 95	Onboard
NA 01-75PAA-2-4.7 Maintenance Instructions, Organizational, Aircraft Fuel System, P-3A/B/C Aircraft	Hard copy	8	Sep 95	Onboard
NA 01-75PAA-6 Periodic Maintenance Information Cards, P-3 Series Aircraft	Hard copy	8	Sep 95	Onboard
NA 01-75PAA-6-3 Daily/Servicing/Special/Conditional Inspections, P-3A/B/C Aircraft	Hard copy	8	Sep 95	Onboard

IV.B.3. TECHNICAL MANUALS

NA 01-75PAA-6-4 Phased Maintenance Requirements Cards, P-3A/B/C Aircraft	Hard copy	8	Sep 95	Onboard
NA 01-75PAA-6-5 Sequence Control Charts, P-3C Aircraft	Hard copy	8	Sep 95	Onboard
NA 01-75PAA-8 Technical Manual, Work Unit Code Manual, P-3 Series	Hard copy	8	Sep 95	Onboard
OPNAVINST 4790.2 (series) Naval Aviation Maintenance Program	Hard copy	8	Sep 95	Onboard

CIN, COURSE TITLE: C-601-9533, P-3 Power Plant and Related Systems (Career) Organizational Maintenance (Track D-601-1110)
TRAINING ACTIVITY: MTU 1011
LOCATION, UIC : NAMTRAU Jacksonville, 66051

TECHNICAL MANUAL NUMBER / TITLE	MEDIUM	QTY REQD	DATE REQD	STATUS
0011 Material Safety Data Sheet: Petrolatum Technical, VV-P-236	Hard copy	1	Nov 99	Onboard
0012 Material Safety Data Sheet: Lubricating Oil, Aircraft Turboshaft Engine, MIL-L-23699	Hard copy	1	Nov 99	Onboard
0013 Material Safety Data Sheet: Hydraulic Fluid, Fire Resistant, MIL-H-83282	Hard copy	1	Nov 99	Onboard
0014 Material Safety Data Sheet: Dry Cleaning Solvent, PD-680	Hard copy	1	Nov 99	Onboard
NA 01-75PAA-2-1 General Information and Servicing, P-3 Series Aircraft	Hard copy	6	Nov 99	Onboard
NA 01-75PAA-2-4.3 Maintenance Instructions, Organizational, Powerplant, P-3A/B/C Aircraft	Hard copy	6	Nov 99	Onboard
NA 01-75PAA-2-4.4 Maintenance Instructions, Organizational, Auxiliary Power Unit, P-3A/B/C Aircraft	Hard copy	6	Nov 99	Onboard
NA 01-75PAA-2-4.5 Maintenance Instructions, Organizational, Powerplant Quick Engine Change Assembly, P-3A/B/C Aircraft	Hard copy	6	Nov 99	Onboard

IV.B.3. TECHNICAL MANUALS

NA 01-75PAA-2-4.6 Maintenance Instructions, Organizational, Propeller, P-3A/B/C Aircraft	Hard copy	6	Nov 99	Onboard

CIN, COURSE TITLE: C-601-9533, P-3 Power Plant and Related Systems (Career) Organizational Maintenance (Track E-601-1110)
TRAINING ACTIVITY: MTU 1012
LOCATION, UIC : NAMTRAU Whidbey Island, 66058

TECHNICAL MANUAL NUMBER / TITLE	MEDIUM	QTY REQD	DATE REQD	STATUS
0011 Material Safety Data Sheet: Petrolatum Technical, VV-P-236	Hard copy	1	Nov 99	Onboard
0012 Material Safety Data Sheet: Lubricating Oil, Aircraft Turboshaft Engine, MIL-L-23699	Hard copy	1	Nov 99	Onboard
0013 Material Safety Data Sheet: Hydraulic Fluid, Fire Resistant, MIL-H-83282	Hard copy	1	Nov 99	Onboard
0014 Material Safety Data Sheet: Dry Cleaning Solvent, PD-680	Hard copy	1	Nov 99	Onboard
NA 01-75PAA-2-1 General Information and Servicing, P-3 Series Aircraft	Hard copy	6	Nov 99	Onboard
NA 01-75PAA-2-4.3 Maintenance Instructions, Organizational, Powerplant, P-3A/B/C Aircraft	Hard copy	6	Nov 99	Onboard
NA 01-75PAA-2-4.4 Maintenance Instructions, Organizational, Auxiliary Power Unit, P-3A/B/C Aircraft	Hard copy	6	Nov 99	Onboard
NA 01-75PAA-2-4.5 Maintenance Instructions, Organizational, Powerplant Quick Engine Change Assembly, P-3A/B/C Aircraft	Hard copy	6	Nov 99	Onboard
NA 01-75PAA-2-4.6 Maintenance Instructions, Organizational, Propeller, P-3A/B/C Aircraft	Hard copy	6	Nov 99	Onboard

IV.B.3. TECHNICAL MANUALS

CIN, COURSE TITLE: C-602-9570, P-3C Integrated Electrical System (Initial) Organizational Maintenance (Track D-602-1054)
TRAINING ACTIVITY: MTU 1011
LOCATION, UIC : NAMTRAU Jacksonville, 66051

TECHNICAL MANUAL NUMBER / TITLE	MEDIUM	QTY REQD	DATE REQD	STATUS
NA 00-25-100 Naval Air Systems Command Technical Manual Program	Hard copy	10	Sep 95	Onboard
NA 01-75PAA-2-1 General Information and Servicing, P-3 Series Aircraft	Hard copy	1	Sep 95	Onboard
NA 01-75PAA-2-10.1 Maintenance Instructions Organizational, Integrated Navigation/Communication Station, P-3C Aircraft	Hard copy	1	Sep 95	Onboard
NA 01-75PAA-2-2 Maintenance Instructions Organizational, Airframe Systems, P-3C Aircraft	Hard copy	10	Sep 95	Onboard
NA 01-75PAA-2-2.2 Maintenance Instructions Organizational, Landing Gear, P-3 Aircraft	Hard copy	10	Sep 95	Onboard
NA 01-75PAA-2-2.4 Maintenance Instructions Organizational, Utility Systems, P-3 Aircraft	Hard copy	10	Sep 95	Onboard
NA 01-75PAA-2-3 Maintenance Instructions Organizational, Hydraulic Power Supply System, P-3 Aircraft	Hard copy	10	Sep 95	Onboard
NA 01-75PAA-2-4 General Information and Servicing, P-3 Series Aircraft	Hard copy	10	Sep 95	Onboard
NA 01-75PAA-2-4.3 Maintenance Instructions, Organizational, Powerplant, P-3A/B/C Aircraft	Hard copy	10	Sep 95	Onboard
NA 01-75PAA-2-4.4 Maintenance Instructions, Organizational, Auxiliary Power Unit, P-3A/B/C Aircraft	Hard copy	10	Sep 95	Onboard
NA 01-75PAA-2-4.5 Maintenance Instructions, Organizational, Powerplant Quick Engine Change Assembly, P-3A/B/C Aircraft	Hard copy	10	Sep 95	Onboard

IV.B.3. TECHNICAL MANUALS

NA 01-75PAA-2-4.6 Maintenance Instructions, Organizational, Propeller, P-3A/B/C Aircraft	Hard copy	10	Sep 95	Onboard
NA 01-75PAA-2-4.7 Maintenance Instructions, Organizational, Aircraft Fuel System, P-3A/B/C Aircraft	Hard copy	10	Sep 95	Onboard
NA 01-75PAA-2-4.8 Intermediate Maintenance with Illustrated Parts Breakdown, Auxiliary Power Unit Buildup and Teardown	Hard copy	10	Sep 95	Onboard
NA 01-75PAA-6 Periodic Maintenance Information Cards, P-3 Series Aircraft	Hard copy	1	Sep 95	Onboard
NA 01-75PAA-6-2 Daily Maintenance Requirements Cards, P-3 Aircraft	Hard copy	1	Sep 95	Onboard
NA 01-75PAA-6-3 Daily/Servicing/Special/Conditional Inspections, P-3A/B/C Aircraft	Hard copy	1	Sep 95	Onboard
NA 01-75PAA-6-4 Phased Maintenance Requirements Cards, P-3A/B/C Aircraft	Hard copy	1	Sep 95	Onboard
NA 01-75PAA-6-5 Sequence Control Charts, P-3C Aircraft	Hard copy	1	Sep 95	Onboard
NA 01-75PAA-8 Technical Manual, Work Unit Code Manual, P-3 Series	Hard copy	10	Sep 95	Onboard
NA 01-75PAC-12-1 Crew Station Maintenance Organizational, Flight Station, P-3C Aircraft	Hard copy	10	Sep 95	Onboard
NA 01-75PAC-12-3 Crew Station Maintenance Organizational, Navigation/Communication Station, P-3C Aircraft	Hard copy	10	Sep 95	Onboard
NA 01-75PAC-2-10 Maintenance Instructions Organizational, Integrated Navigation/Communication Station, P-3C Aircraft	Hard copy	10	Sep 95	Onboard
NA 01-75PAC-2-13 Maintenance Instructions Organizational, Electrical Interconnections Wiring Data, P-3C Aircraft	Hard copy	1	Sep 95	Onboard

IV.B.3. TECHNICAL MANUALS

NA 01-75PAC-2-13.1.1 Maintenance Instructions Organizational, Airframe Related Electrical Systems, P-3C Aircraft	Hard copy	10	Sep 95	Onboard
NA 01-75PAC-2-13.1.2 Maintenance Instructions Organizational, Power Plant Related Electrical Systems, P-3C Aircraft	Hard copy	10	Sep 95	Onboard
NA 01-75PAC-2-13.2 Maintenance Instructions Organizational, Electrical Power Generation and Distribution Wiring Data	Hard copy	10	Sep 95	Onboard
NA 01-75PAC-2-13.2.1 Maintenance Instructions Organizational, Airframe Related Electrical Systems Wiring Data, P-3C Aircraft	Hard copy	10	Sep 95	Onboard
NA 01-75PAC-2-13.2.2 Maintenance Instructions Organizational, Power Plant Related Electrical Systems Wiring Data, P-3C Aircraft	Hard copy	10	Sep 95	Onboard
NA 01-75PAC-2-13.2.3 Maintenance Instructions Organizational, Flight Instruments Wiring Data, P-3C Aircraft	Hard copy	10	Sep 95	Onboard
NA 01-75PAC-2-9 Maintenance Instructions Organizational, Integrated Flight Station Systems, P-3C Aircraft	Hard copy	10	Sep 95	Onboard
NA 01-75PAC-2-9.1 Maintenance Instructions Organizational, Integrated Flight Station Wiring Data, P-3C Aircraft	Hard copy	10	Sep 95	Onboard
NA 01-75PAC-4-1 Organizational Maintenance with Illustrated Parts Breakdown, Introduction, Numerical and Reference Designations, P-3C Aircraft	Hard copy	10	Sep 95	Onboard
NA 01-75PAC-4-7 Organizational Maintenance with Illustrated Parts Breakdown, Electrical and Instrument Systems, P-3 Aircraft	Hard copy	10	Sep 95	Onboard
NA 01-75PAC-4-8 Organizational Maintenance with Illustrated Parts Breakdown, Communication and Navigation Electronic Systems, P-3 Aircraft	Hard copy	10	Sep 95	Onboard
OPNAVINST 4790.2 (series) Naval Aviation Maintenance Program	Hard copy	10	Sep 95	Onboard

IV.B.3. TECHNICAL MANUALS

CIN, COURSE TITLE: C-602-9570, P-3C Integrated Electrical System (Initial) Organizational Maintenance (Track E-602-1054)
TRAINING ACTIVITY: MTU 1012
LOCATION, UIC : NAMTRAU Whidbey Island, 66058

TECHNICAL MANUAL NUMBER / TITLE	MEDIUM	QTY REQD	DATE REQD	STATUS
NA 00-25-100 Naval Air Systems Command Technical Manual Program	Hard copy	10	Sep 95	Onboard
NA 01-75PAA-2-1 General Information and Servicing, P-3 Series Aircraft	Hard copy	1	Sep 95	Onboard
NA 01-75PAA-2-10.1 Maintenance Instructions Organizational, Integrated Navigation/Communication Station, P-3C Aircraft	Hard copy	1	Sep 95	Onboard
NA 01-75PAA-2-2 Maintenance Instructions Organizational, Airframe Systems, P-3C Aircraft	Hard copy	10	Sep 95	Onboard
NA 01-75PAA-2-2.2 Maintenance Instructions Organizational, Landing Gear, P-3 Aircraft	Hard copy	10	Sep 95	Onboard
NA 01-75PAA-2-2.4 Maintenance Instructions Organizational, Utility Systems, P-3 Aircraft	Hard copy	10	Sep 95	Onboard
NA 01-75PAA-2-3 Maintenance Instructions Organizational, Hydraulic Power Supply System, P-3 Aircraft	Hard copy	10	Sep 95	Onboard
NA 01-75PAA-2-4 General Information and Servicing, P-3 Series Aircraft	Hard copy	10	Sep 95	Onboard
NA 01-75PAA-2-4.3 Maintenance Instructions, Organizational, Powerplant, P-3A/B/C Aircraft	Hard copy	10	Sep 95	Onboard
NA 01-75PAA-2-4.4 Maintenance Instructions, Organizational, Auxiliary Power Unit, P-3A/B/C Aircraft	Hard copy	10	Sep 95	Onboard
NA 01-75PAA-2-4.5 Maintenance Instructions, Organizational, Powerplant Quick Engine Change Assembly, P-3A/B/C Aircraft	Hard copy	10	Sep 95	Onboard

IV.B.3. TECHNICAL MANUALS

NA 01-75PAA-2-4.6 Maintenance Instructions, Organizational, Propeller, P-3A/B/C Aircraft	Hard copy	10	Sep 95	Onboard
NA 01-75PAA-2-4.7 Maintenance Instructions, Organizational, Aircraft Fuel System, P-3A/B/C Aircraft	Hard copy	10	Sep 95	Onboard
NA 01-75PAA-2-4.8 Intermediate Maintenance with Illustrated Parts Breakdown, Auxiliary Power Unit Buildup and Teardown	Hard copy	10	Sep 95	Onboard
NA 01-75PAA-6 Periodic Maintenance Information Cards, P-3 Series Aircraft	Hard copy	1	Sep 95	Onboard
NA 01-75PAA-6-2 Daily Maintenance Requirements Cards, P-3 Aircraft	Hard copy	1	Sep 95	Onboard
NA 01-75PAA-6-3 Daily/Servicing/Special/Conditional Inspections, P-3A/B/C Aircraft	Hard copy	1	Sep 95	Onboard
NA 01-75PAA-6-4 Phased Maintenance Requirements Cards, P-3A/B/C Aircraft	Hard copy	1	Sep 95	Onboard
NA 01-75PAA-6-5 Sequence Control Charts, P-3C Aircraft	Hard copy	1	Sep 95	Onboard
NA 01-75PAA-8 Technical Manual, Work Unit Code Manual, P-3 Series	Hard copy	10	Sep 95	Onboard
NA 01-75PAC-12-1 Crew Station Maintenance Organizational, Flight Station, P-3C Aircraft	Hard copy	10	Sep 95	Onboard
NA 01-75PAC-12-3 Crew Station Maintenance Organizational, Navigation/Communication Station, P-3C Aircraft	Hard copy	10	Sep 95	Onboard
NA 01-75PAC-2-10 Maintenance Instructions Organizational, Integrated Navigation/Communication Station, P-3C Aircraft	Hard copy	10	Sep 95	Onboard
NA 01-75PAC-2-13 Maintenance Instructions Organizational, Electrical Interconnections Wiring Data, P-3C Aircraft	Hard copy	1	Sep 95	Onboard

IV.B.3. TECHNICAL MANUALS

NA 01-75PAC-2-13.1.1 Maintenance Instructions Organizational, Airframe Related Electrical Systems, P-3C Aircraft	Hard copy	10	Sep 95	Onboard
NA 01-75PAC-2-13.1.2 Maintenance Instructions Organizational, Power Plant Related Electrical Systems, P-3C Aircraft	Hard copy	10	Sep 95	Onboard
NA 01-75PAC-2-13.2 Maintenance Instructions Organizational, Electrical Power Generation and Distribution Wiring Data	Hard copy	10	Sep 95	Onboard
NA 01-75PAC-2-13.2.1 Maintenance Instructions Organizational, Airframe Related Electrical Systems Wiring Data, P-3C Aircraft	Hard copy	10	Sep 95	Onboard
NA 01-75PAC-2-13.2.2 Maintenance Instructions Organizational, Power Plant Related Electrical Systems Wiring Data, P-3C Aircraft	Hard copy	10	Sep 95	Onboard
NA 01-75PAC-2-13.2.3 Maintenance Instructions Organizational, Flight Instruments Wiring Data, P-3C Aircraft	Hard copy	10	Sep 95	Onboard
NA 01-75PAC-2-9 Maintenance Instructions Organizational, Integrated Flight Station Systems, P-3C Aircraft	Hard copy	10	Sep 95	Onboard
NA 01-75PAC-2-9.1 Maintenance Instructions Organizational, Integrated Flight Station Wiring Data, P-3C Aircraft	Hard copy	10	Sep 95	Onboard
NA 01-75PAC-4-1 Organizational Maintenance with Illustrated Parts Breakdown, Introduction, Numerical and Reference Designations, P-3C Aircraft	Hard copy	10	Sep 95	Onboard
NA 01-75PAC-4-7 Organizational Maintenance with Illustrated Parts Breakdown, Electrical and Instrument Systems, P-3 Aircraft	Hard copy	10	Sep 95	Onboard
NA 01-75PAC-4-8 Organizational Maintenance with Illustrated Parts Breakdown, Communication and Navigation Electronic Systems, P-3 Aircraft	Hard copy	10	Sep 95	Onboard
OPNAVINST 4790.2 (series) Naval Aviation Maintenance Program	Hard copy	10	Sep 95	Onboard

IV.B.3. TECHNICAL MANUALS

CIN, COURSE TITLE: C-603-9531, P-3 Structures Hydraulic Power and Flight Controls (Career) Organizational Maintenance (Track D-602-1080)
TRAINING ACTIVITY: MTU 1011
LOCATION, UIC : NAMTRAU Jacksonville, 66051

TECHNICAL MANUAL NUMBER / TITLE	MEDIUM	QTY REQD	DATE REQD	STATUS
NA 01-1A-20 Organizational, Intermediate, and Depot Maintenance, Aviation Hose and Tube Manual	Hard copy	1	Sep 95	Onboard
NA 01-1A-35 Organizational, Intermediate, and Depot Maintenance, Aircraft Fuel Cells and Tanks,	Hard copy	7	Sep 95	Onboard
NA 01-1A-8 Engineering Manual Series, Aircraft and Missile Repair, Structural Hardware	Hard copy	1	Sep 95	Onboard
NA 01-75PAA-2-1 General Information and Servicing, P-3 Series Aircraft	Hard copy	7	Sep 95	Onboard
NA 01-75PAA-2-2 Maintenance Instructions Organizational, Airframe Systems, P-3C Aircraft	Hard copy	7	Sep 95	Onboard
NA 01-75PAA-2-2.1 Maintenance Instructions Organizational, Corrosion Control, Cleaning, Painting and Decontamination, P-3C Aircraft	Hard copy	1	Sep 95	Onboard
NA 01-75PAA-2-2.2 Maintenance Instructions Organizational, Landing Gear, P-3 Aircraft	Hard copy	7	Sep 95	Onboard
NA 01-75PAA-2-2.4 Maintenance Instructions Organizational, Utility Systems, P-3 Aircraft	Hard copy	1	Sep 95	Onboard
NA 01-75PAA-2-3 Maintenance Instructions Organizational, Hydraulic Power Supply System, P-3 Aircraft	Hard copy	1	Sep 95	Onboard
NA 01-75PAA-2-4.4 Maintenance Instructions, Organizational, Auxiliary Power Unit, P-3A/B/C Aircraft	Hard copy	7	Sep 95	Onboard

IV.B.3. TECHNICAL MANUALS

NA 01-75PAA-2-4.7 Maintenance Instructions, Organizational, Aircraft Fuel System, P-3A/B/C Aircraft	Hard copy	7	Sep 95	Onboard
NA 01-75PAA-2-4.8 Intermediate Maintenance with Illustrated Parts Breakdown, Auxiliary Power Unit Buildup and Teardown	Hard copy	10	Sep 95	Onboard
NA 01-75PAA-3-1 Structural Repair Instructions, Organizational and Intermediate Level Maintenance, P-3A/B/C Aircraft	Hard copy	7	Sep 95	Onboard
NA 01-75PAA-3-1.1 Organizational and Intermediate Level Maintenance, Structural Repair Instructions, P-3A/B/C Aircraft	Hard copy	7	Sep 95	Onboard
NA 01-75PAA-6-3 Daily/Servicing/Special/Conditional Inspections, P-3A/B/C Aircraft	Hard copy	7	Sep 95	Onboard
NA 01-75PAA-8 Technical Manual, Work Unit Code Manual, P-3 Series	Hard copy	7	Sep 95	Onboard
NA 01-75PAC-4-1 Organizational Maintenance with Illustrated Parts Breakdown, Introduction, Numerical and Reference Designations, P-3C Aircraft	Hard copy	1	Sep 95	Onboard
NA 01-75PAC-4-2 Organizational Maintenance with Illustrated Parts Breakdown, Airframe, P-3C Aircraft	Hard copy	1	Sep 95	Onboard
NA 01-75PAC-4-3 Organizational Maintenance with Illustrated Parts Breakdown, Landing Gear and Hydraulic Power Supply Systems, P-3C	Hard copy	1	Sep 95	Onboard

CIN, COURSE TITLE: C-603-9531, P-3 Structures Hydraulic Power and Flight Controls (Career) Organizational Maintenance (Track E-602-1080)
TRAINING ACTIVITY: MTU 1012
LOCATION, UIC : NAMTRAU Whidbey Island, 66058

TECHNICAL MANUAL NUMBER / TITLE	MEDIUM	QTY REQD	DATE REQD	STATUS
NA 01-1A-20 Organizational, Intermediate, and Depot Maintenance, Aviation Hose and Tube Manual	Hard copy	1	Sep 95	Onboard
NA 01-1A-35 Organizational, Intermediate, and Depot Maintenance, Aircraft Fuel Cells and Tanks,	Hard copy	7	Sep 95	Onboard

IV.B.3. TECHNICAL MANUALS

NA 01-1A-8 Engineering Manual Series, Aircraft and Missile Repair, Structural Hardware	Hard copy	1	Sep 95	Onboard
NA 01-75PAA-2-1 General Information and Servicing, P-3 Series Aircraft	Hard copy	7	Sep 95	Onboard
NA 01-75PAA-2-2 Maintenance Instructions Organizational, Airframe Systems, P-3C Aircraft	Hard copy	7	Sep 95	Onboard
NA 01-75PAA-2-2.1 Maintenance Instructions Organizational, Corrosion Control, Cleaning, Painting and Decontamination, P-3C Aircraft	Hard copy	1	Sep 95	Onboard
NA 01-75PAA-2-2.2 Maintenance Instructions Organizational, Landing Gear, P-3 Aircraft	Hard copy	7	Sep 95	Onboard
NA 01-75PAA-2-2.4 Maintenance Instructions Organizational, Utility Systems, P-3 Aircraft	Hard copy	1	Sep 95	Onboard
NA 01-75PAA-2-3 Maintenance Instructions Organizational, Hydraulic Power Supply System, P-3 Aircraft	Hard copy	1	Sep 95	Onboard
NA 01-75PAA-2-4.4 Maintenance Instructions, Organizational, Auxiliary Power Unit, P-3A/B/C Aircraft	Hard copy	7	Sep 95	Onboard
NA 01-75PAA-2-4.7 Maintenance Instructions, Organizational, Aircraft Fuel System, P-3A/B/C Aircraft	Hard copy	7	Sep 95	Onboard
NA 01-75PAA-2-4.8 Intermediate Maintenance with Illustrated Parts Breakdown, Auxiliary Power Unit Buildup and Teardown	Hard copy	10	Sep 95	Onboard
NA 01-75PAA-3-1 Structural Repair Instructions, Organizational and Intermediate Level Maintenance, P-3A/B/C Aircraft	Hard copy	7	Sep 95	Onboard
NA 01-75PAA-3-1.1 Organizational and Intermediate Level Maintenance, Structural Repair Instructions, P-3A/B/C Aircraft	Hard copy	7	Sep 95	Onboard

IV.B.3. TECHNICAL MANUALS

NA 01-75PAA-6-3 Daily/Servicing/Special/Conditional Inspections, P-3A/B/C Aircraft	Hard copy	7	Sep 95	Onboard
NA 01-75PAA-8 Technical Manual, Work Unit Code Manual, P-3 Series	Hard copy	7	Sep 95	Onboard
NA 01-75PAC-4-1 Organizational Maintenance with Illustrated Parts Breakdown, Introduction, Numerical and Reference Designations, P-3C Aircraft	Hard copy	1	Sep 95	Onboard
NA 01-75PAC-4-2 Organizational Maintenance with Illustrated Parts Breakdown, Airframe, P-3C Aircraft	Hard copy	1	Sep 95	Onboard
NA 01-75PAC-4-3 Organizational Maintenance with Illustrated Parts Breakdown, Landing Gear and Hydraulic Power Supply Systems, P-3C	Hard copy	1	Sep 95	Onboard

CIN, COURSE TITLE: C-603-9530, P-3 Structures Hydraulic Power and Flight Controls (Initial) Organizational Maintenance (Track D-602-1081)
TRAINING ACTIVITY: MTU 1011
LOCATION, UIC : NAMTRAU Jacksonville, 66051

TECHNICAL MANUAL NUMBER / TITLE	MEDIUM	QTY REQD	DATE REQD	STATUS
NA 01-1A-17 Organizational, Intermediate, and Depot Maintenance, Aviation Hydraulics Manual	Hard copy	7	Sep 95	Onboard
NA 01-1A-20 Organizational, Intermediate, and Depot Maintenance, Aviation Hose and Tube Manual	Hard copy	1	Sep 95	Onboard
NA 01-1A-35 Organizational, Intermediate, and Depot Maintenance, Aircraft Fuel Cells and Tanks,	Hard copy	1	Sep 95	Onboard
NA 01-1A-8 Engineering Manual Series, Aircraft and Missile Repair, Structural Hardware	Hard copy	1	Sep 95	Onboard
NA 01-75PAA-2-1 General Information and Servicing, P-3 Series Aircraft	Hard copy	1	Sep 95	Onboard
NA 01-75PAA-2-2 Maintenance Instructions Organizational, Airframe Systems, P-3C Aircraft	Hard copy	7	Sep 95	Onboard

IV.B.3. TECHNICAL MANUALS

NA 01-75PAA-2-2.1 Maintenance Instructions Organizational, Corrosion Control, Cleaning, Painting and Decontamination, P-3C Aircraft	Hard copy	1	Sep 95	Onboard
NA 01-75PAA-2-2.2 Maintenance Instructions Organizational, Landing Gear, P-3 Aircraft	Hard copy	7	Sep 95	Onboard
NA 01-75PAA-2-3 Maintenance Instructions Organizational, Hydraulic Power Supply System, P-3 Aircraft	Hard copy	7	Sep 95	Onboard
NA 01-75PAA-3-1 Structural Repair Instructions, Organizational and Intermediate Level Maintenance, P-3A/B/C Aircraft	Hard copy	7	Sep 95	Onboard
NA 01-75PAA-3-1.1 Organizational and Intermediate Level Maintenance, Structural Repair Instructions, P-3A/B/C Aircraft	Hard copy	7	Sep 95	Onboard
NA 01-75PAA-6 Periodic Maintenance Information Cards, P-3 Series Aircraft	Hard copy	7	Sep 95	Onboard
NA 01-75PAA-6-2 Daily Maintenance Requirements Cards, P-3 Aircraft	Hard copy	7	Sep 95	Onboard
NA 01-75PAA-6-3 Daily/Servicing/Special/Conditional Inspections, P-3A/B/C Aircraft	Hard copy	7	Sep 95	Onboard
NA 01-75PAA-6-4 Phased Maintenance Requirements Cards, P-3A/B/C Aircraft	Hard copy	7	Sep 95	Onboard
NA 01-75PAA-6-5 Sequence Control Charts, P-3C Aircraft	Hard copy	7	Sep 95	Onboard
NA 01-75PAA-8 Technical Manual, Work Unit Code Manual, P-3 Series	Hard copy	7	Sep 95	Onboard
NA 01-75PAC-4-1 Organizational Maintenance with Illustrated Parts Breakdown, Introduction, Numerical and Reference Designations, P-3C Aircraft	Hard copy	1	Sep 95	Onboard
NA 01-75PAC-4-2 Organizational Maintenance with Illustrated Parts Breakdown, Airframe, P-3C Aircraft	Hard copy	1	Sep 95	Onboard

IV.B.3. TECHNICAL MANUALS

NA 01-75PAC-4-3 Organizational Maintenance with Illustrated Parts Breakdown, Landing Gear and Hydraulic Power Supply Systems, P-3C	Hard copy	1	Sep 95	Onboard
OPNAVINST 4790.2 (series) Naval Aviation Maintenance Program	Hard copy	7	Sep 95	Onboard

CIN, COURSE TITLE: C-603-9530, P-3 Structures Hydraulic Power and Flight Controls (Initial) Organizational Maintenance (Track E-602-1081)
TRAINING ACTIVITY: MTU 1012
LOCATION, UIC : NAMTRAU Whidbey Island, 66058

TECHNICAL MANUAL NUMBER / TITLE	MEDIUM	QTY REQD	DATE REQD	STATUS
NA 01-1A-17 Organizational, Intermediate, and Depot Maintenance, Aviation Hydraulics Manual	Hard copy	7	Sep 95	Onboard
NA 01-1A-20 Organizational, Intermediate, and Depot Maintenance, Aviation Hose and Tube Manual	Hard copy	1	Sep 95	Onboard
NA 01-1A-35 Organizational, Intermediate, and Depot Maintenance, Aircraft Fuel Cells and Tanks,	Hard copy	1	Sep 95	Onboard
NA 01-1A-8 Engineering Manual Series, Aircraft and Missile Repair, Structural Hardware	Hard copy	1	Sep 95	Onboard
NA 01-75PAA-2-1 General Information and Servicing, P-3 Series Aircraft	Hard copy	1	Sep 95	Onboard
NA 01-75PAA-2-2 Maintenance Instructions Organizational, Airframe Systems, P-3C Aircraft	Hard copy	7	Sep 95	Onboard
NA 01-75PAA-2-2.1 Maintenance Instructions Organizational, Corrosion Control, Cleaning, Painting and Decontamination, P-3C Aircraft	Hard copy	1	Sep 95	Onboard
NA 01-75PAA-2-2.2 Maintenance Instructions Organizational, Landing Gear, P-3 Aircraft	Hard copy	7	Sep 95	Onboard
NA 01-75PAA-2-3 Maintenance Instructions Organizational, Hydraulic Power Supply System, P-3 Aircraft	Hard copy	7	Sep 95	Onboard

IV.B.3. TECHNICAL MANUALS

NA 01-75PAA-3-1 Structural Repair Instructions, Organizational and Intermediate Level Maintenance, P-3A/B/C Aircraft	Hard copy	7	Sep 95	Onboard
NA 01-75PAA-3-1.1 Organizational and Intermediate Level Maintenance, Structural Repair Instructions, P-3A/B/C Aircraft	Hard copy	7	Sep 95	Onboard
NA 01-75PAA-6 Periodic Maintenance Information Cards, P-3 Series Aircraft	Hard copy	7	Sep 95	Onboard
NA 01-75PAA-6-2 Daily Maintenance Requirements Cards, P-3 Aircraft	Hard copy	7	Sep 95	Onboard
NA 01-75PAA-6-3 Daily/Servicing/Special/Conditional Inspections, P-3A/B/C Aircraft	Hard copy	7	Sep 95	Onboard
NA 01-75PAA-6-4 Phased Maintenance Requirements Cards, P-3A/B/C Aircraft	Hard copy	7	Sep 95	Onboard
NA 01-75PAA-6-5 Sequence Control Charts, P-3C Aircraft	Hard copy	7	Sep 95	Onboard
NA 01-75PAA-8 Technical Manual, Work Unit Code Manual, P-3 Series	Hard copy	7	Sep 95	Onboard
NA 01-75PAC-4-1 Organizational Maintenance with Illustrated Parts Breakdown, Introduction, Numerical and Reference Designations, P-3C Aircraft	Hard copy	1	Sep 95	Onboard
NA 01-75PAC-4-2 Organizational Maintenance with Illustrated Parts Breakdown, Airframe, P-3C Aircraft	Hard copy	1	Sep 95	Onboard
NA 01-75PAC-4-3 Organizational Maintenance with Illustrated Parts Breakdown, Landing Gear and Hydraulic Power Supply Systems, P-3C	Hard copy	1	Sep 95	Onboard
OPNAVINST 4790.2 (series) Naval Aviation Maintenance Program	Hard copy	7	Sep 95	Onboard

IV.B.3. TECHNICAL MANUALS

CIN, COURSE TITLE: C-602-9571, P-3C Integrated Electrical System (Career) Organizational Maintenance (Track D-602-1151)
TRAINING ACTIVITY: MTU 1011
LOCATION, UIC : NAMTRAU Jacksonville, 66051

TECHNICAL MANUAL NUMBER / TITLE	MEDIUM	QTY REQD	DATE REQD	STATUS
NA 01-75PAA-2-1 General Information and Servicing, P-3 Series Aircraft	Hard copy	10	Sep 95	Onboard
NA 01-75PAA-2-10.1 Maintenance Instructions Organizational, Integrated Navigation/Communication Station, P-3C Aircraft	Hard copy	1	Sep 95	Onboard
NA 01-75PAA-2-2 Maintenance Instructions Organizational, Airframe Systems, P-3C Aircraft	Hard copy	10	Sep 95	Onboard
NA 01-75PAA-2-2.2 Maintenance Instructions Organizational, Landing Gear, P-3 Aircraft	Hard copy	10	Sep 95	Onboard
NA 01-75PAA-2-2.4 Maintenance Instructions Organizational, Utility Systems, P-3 Aircraft	Hard copy	10	Sep 95	Onboard
NA 01-75PAA-2-3 Maintenance Instructions Organizational, Hydraulic Power Supply System, P-3 Aircraft	Hard copy	10	Sep 95	Onboard
NA 01-75PAA-2-4 General Information and Servicing, P-3 Series Aircraft	Hard copy	10	Sep 95	Onboard
NA 01-75PAA-2-4.3 Maintenance Instructions, Organizational, Powerplant, P-3A/B/C Aircraft	Hard copy	10	Sep 95	Onboard
NA 01-75PAA-2-4.4 Maintenance Instructions, Organizational, Auxiliary Power Unit, P-3A/B/C Aircraft	Hard copy	10	Sep 95	Onboard
NA 01-75PAA-2-4.5 Maintenance Instructions, Organizational, Powerplant Quick Engine Change Assembly, P-3A/B/C Aircraft	Hard copy	10	Sep 95	Onboard
NA 01-75PAA-2-4.6 Maintenance Instructions, Organizational, Propeller, P-3A/B/C Aircraft	Hard copy	10	Sep 95	Onboard

IV.B.3. TECHNICAL MANUALS

NA 01-75PAA-2-4.7 Maintenance Instructions, Organizational, Aircraft Fuel System, P-3A/B/C Aircraft	Hard copy	10	Sep 95	Onboard
NA 01-75PAC-12-1 Crew Station Maintenance Organizational, Flight Station, P-3C Aircraft	Hard copy	10	Sep 95	Onboard
NA 01-75PAC-12-3 Crew Station Maintenance Organizational, Navigation/Communication Station, P-3C Aircraft	Hard copy	10	Sep 95	Onboard
NA 01-75PAC-12-6 Crew Station Maintenance Organizational, Armament Ordnance Station, P-3C Aircraft	Hard copy	15	Sep 95	Onboard
NA 01-75PAC-2-10 Maintenance Instructions Organizational, Integrated Navigation/Communication Station, P-3C Aircraft	Hard copy	10	Sep 95	Onboard
NA 01-75PAC-2-13 Maintenance Instructions Organizational, Electrical Interconnections Wiring Data, P-3C Aircraft	Hard copy	1	Sep 95	Onboard
NA 01-75PAC-2-13.1 Maintenance Instructions Organizational, Electrical Power Generation and Distribution, P-3C Aircraft	Hard copy	10	Sep 95	Onboard
NA 01-75PAC-2-13.1.1 Maintenance Instructions Organizational, Airframe Related Electrical Systems, P-3C Aircraft	Hard copy	10	Sep 95	Onboard
NA 01-75PAC-2-13.1.2 Maintenance Instructions Organizational, Power Plant Related Electrical Systems, P-3C Aircraft	Hard copy	10	Sep 95	Onboard
NA 01-75PAC-2-13.1.3 Maintenance Instructions Organizational, Flight Instruments, P-3C Aircraft	Hard copy	10	Sep 95	Onboard
NA 01-75PAC-2-13.2 Maintenance Instructions Organizational, Electrical Power Generation and Distribution Wiring Data	Hard copy	10	Sep 95	Onboard
NA 01-75PAC-2-13.2.1 Maintenance Instructions Organizational, Airframe Related Electrical Systems Wiring Data, P-3C Aircraft	Hard copy	10	Sep 95	Onboard

IV.B.3. TECHNICAL MANUALS

NA 01-75PAC-2-13.2.2 Maintenance Instructions Organizational, Power Plant Related Electrical Systems Wiring Data, P-3C Aircraft	Hard copy	10	Sep 95	Onboard
NA 01-75PAC-2-13.2.3 Maintenance Instructions Organizational, Flight Instruments Wiring Data, P-3C Aircraft	Hard copy	10	Sep 95	Onboard
NA 01-75PAC-2-9 Maintenance Instructions Organizational, Integrated Flight Station Systems, P-3C Aircraft	Hard copy	10	Sep 95	Onboard
NA 01-75PAC-2-9.1 Maintenance Instructions Organizational, Integrated Flight Station Wiring Data, P-3C Aircraft	Hard copy	1	Sep 95	Onboard
OPNAVINST 4790.2 (series) Naval Aviation Maintenance Program	Hard copy	10	Sep 95	Onboard

CIN, COURSE TITLE: C-602-9571, P-3C Integrated Electrical System (Career) Organizational Maintenance (Track E-602-1151)
TRAINING ACTIVITY: MTU 1012
LOCATION, UIC : NAMTRAU Whidbey Island, 66058

TECHNICAL MANUAL NUMBER / TITLE	MEDIUM	QTY REQD	DATE REQD	STATUS
NA 01-75PAA-2-1 General Information and Servicing, P-3 Series Aircraft	Hard copy	10	Sep 95	Onboard
NA 01-75PAA-2-10.1 Maintenance Instructions Organizational, Integrated Navigation/Communication Station, P-3C Aircraft	Hard copy	1	Sep 95	Onboard
NA 01-75PAA-2-2 Maintenance Instructions Organizational, Airframe Systems, P-3C Aircraft	Hard copy	10	Sep 95	Onboard
NA 01-75PAA-2-2.2 Maintenance Instructions Organizational, Landing Gear, P-3 Aircraft	Hard copy	10	Sep 95	Onboard
NA 01-75PAA-2-2.4 Maintenance Instructions Organizational, Utility Systems, P-3 Aircraft	Hard copy	10	Sep 95	Onboard
NA 01-75PAA-2-3 Maintenance Instructions Organizational, Hydraulic Power Supply System, P-3 Aircraft	Hard copy	10	Sep 95	Onboard

IV.B.3. TECHNICAL MANUALS

NA 01-75PAA-2-4 General Information and Servicing, P-3 Series Aircraft	Hard copy	10	Sep 95	Onboard
NA 01-75PAA-2-4.3 Maintenance Instructions, Organizational, Powerplant, P-3A/B/C Aircraft	Hard copy	10	Sep 95	Onboard
NA 01-75PAA-2-4.4 Maintenance Instructions, Organizational, Auxiliary Power Unit, P-3A/B/C Aircraft	Hard copy	10	Sep 95	Onboard
NA 01-75PAA-2-4.5 Maintenance Instructions, Organizational, Powerplant Quick Engine Change Assembly, P-3A/B/C Aircraft	Hard copy	10	Sep 95	Onboard
NA 01-75PAA-2-4.6 Maintenance Instructions, Organizational, Propeller, P-3A/B/C Aircraft	Hard copy	10	Sep 95	Onboard
NA 01-75PAA-2-4.7 Maintenance Instructions, Organizational, Aircraft Fuel System, P-3A/B/C Aircraft	Hard copy	10	Sep 95	Onboard
NA 01-75PAC-12-1 Crew Station Maintenance Organizational, Flight Station, P-3C Aircraft	Hard copy	10	Sep 95	Onboard
NA 01-75PAC-12-3 Crew Station Maintenance Organizational, Navigation/Communication Station, P-3C Aircraft	Hard copy	10	Sep 95	Onboard
NA 01-75PAC-2-10 Maintenance Instructions Organizational, Integrated Navigation/Communication Station, P-3C Aircraft	Hard copy	10	Sep 95	Onboard
NA 01-75PAC-2-13 Maintenance Instructions Organizational, Electrical Interconnections Wiring Data, P-3C Aircraft	Hard copy	1	Sep 95	Onboard
NA 01-75PAC-2-13.1 Maintenance Instructions Organizational, Electrical Power Generation and Distribution, P-3C Aircraft	Hard copy	10	Sep 95	Onboard
NA 01-75PAC-2-13.1.1 Maintenance Instructions Organizational, Airframe Related Electrical Systems, P-3C Aircraft	Hard copy	10	Sep 95	Onboard

IV.B.3. TECHNICAL MANUALS

NA 01-75PAC-2-13.1.2 Maintenance Instructions Organizational, Power Plant Related Electrical Systems, P-3C Aircraft	Hard copy	10	Sep 95	Onboard
NA 01-75PAC-2-13.1.3 Maintenance Instructions Organizational, Flight Instruments, P-3C Aircraft	Hard copy	10	Sep 95	Onboard
NA 01-75PAC-2-13.2 Maintenance Instructions Organizational, Electrical Power Generation and Distribution Wiring Data	Hard copy	10	Sep 95	Onboard
NA 01-75PAC-2-13.2.1 Maintenance Instructions Organizational, Airframe Related Electrical Systems Wiring Data, P-3C Aircraft	Hard copy	10	Sep 95	Onboard
NA 01-75PAC-2-13.2.2 Maintenance Instructions Organizational, Power Plant Related Electrical Systems Wiring Data, P-3C Aircraft	Hard copy	10	Sep 95	Onboard
NA 01-75PAC-2-13.2.3 Maintenance Instructions Organizational, Flight Instruments Wiring Data, P-3C Aircraft	Hard copy	10	Sep 95	Onboard
NA 01-75PAC-2-9 Maintenance Instructions Organizational, Integrated Flight Station Systems, P-3C Aircraft	Hard copy	10	Sep 95	Onboard
NA 01-75PAC-2-9.1 Maintenance Instructions Organizational, Integrated Flight Station Wiring Data, P-3C Aircraft	Hard copy	1	Sep 95	Onboard
OPNAVINST 4790.2 (series) Naval Aviation Maintenance Program	Hard copy	10	Sep 95	Onboard

CIN, COURSE TITLE: C-603-9532, P-3 Environmental Control Systems Integrated Organizational Maintenance (Track D-602-1161)
TRAINING ACTIVITY: MTU 1011
LOCATION, UIC : NAMTRAU Jacksonville, 66051

TECHNICAL MANUAL NUMBER / TITLE	MEDIUM	QTY REQD	DATE REQD	STATUS
NA 01-1A-509 Aircraft Weapons Systems Cleaning and Corrosion Control	Hard copy	8	Sep 95	Onboard
NA 01-75PAA-2-1 General Information and Servicing, P-3 Series Aircraft	Hard copy	8	Sep 95	Onboard

IV.B.3. TECHNICAL MANUALS

NA 01-75PAA-2-2 Maintenance Instructions Organizational, Airframe Systems, P-3C Aircraft	Hard copy	8	Sep 95	Onboard
NA 01-75PAA-2-2.3 Maintenance Instructions Organizational, Safety and Survival, P-3A/B/C Aircraft,	Hard copy	8	Sep 95	Onboard
NA 01-75PAA-2-2.4 Maintenance Instructions Organizational, Utility Systems, P-3 Aircraft	Hard copy	8	Sep 95	Onboard
NA 01-75PAA-4-4 Utility Systems, Safety and Survival Environmental Control and Interior Equipment, P-3C Aircraft	Hard copy	8	Sep 95	Onboard
NA 01-75PAA-8 Technical Manual, Work Unit Code Manual, P-3 Series	Hard copy	8	Sep 95	Onboard
NA 01-75PAC-4-1 Organizational Maintenance with Illustrated Parts Breakdown, Introduction, Numerical and Reference Designations, P-3C Aircraft	Hard copy	8	Sep 95	Onboard
NA 11-100-1.1 Cartridges and Cartridge Activated Devices for Aircraft and Associated Equipment	Hard copy	8	Sep 95	Onboard

CIN, COURSE TITLE: C-603-9532, P-3 Environmental Control Systems Integrated Organizational Maintenance (Track E-602-1161)
TRAINING ACTIVITY: MTU 1012
LOCATION, UIC : NAMTRAU Whidbey Island, 66058

TECHNICAL MANUAL NUMBER / TITLE	MEDIUM	QTY REQD	DATE REQD	STATUS
NA 01-1A-509 Aircraft Weapons Systems Cleaning and Corrosion Control	Hard copy	8	Sep 95	Onboard
NA 01-75PAA-2-1 General Information and Servicing, P-3 Series Aircraft	Hard copy	8	Sep 95	Onboard
NA 01-75PAA-2-2 Maintenance Instructions Organizational, Airframe Systems, P-3C Aircraft	Hard copy	8	Sep 95	Onboard
NA 01-75PAA-2-2.3 Maintenance Instructions Organizational, Safety and Survival, P-3A/B/C Aircraft,	Hard copy	8	Sep 95	Onboard

IV.B.3. TECHNICAL MANUALS

NA 01-75PAA-2-2.4 Maintenance Instructions Organizational, Utility Systems, P-3 Aircraft	Hard copy	8	Sep 95	Onboard
NA 01-75PAA-4-4 Utility Systems, Safety and Survival Environmental Control and Interior Equipment, P-3C Aircraft	Hard copy	8	Sep 95	Onboard
NA 01-75PAA-8 Technical Manual, Work Unit Code Manual, P-3 Series	Hard copy	8	Sep 95	Onboard
NA 01-75PAC-4-1 Organizational Maintenance with Illustrated Parts Breakdown, Introduction, Numerical and Reference Designations, P-3C Aircraft	Hard copy	8	Sep 95	Onboard
NA 11-100-1.1 Cartridges and Cartridge Activated Devices for Aircraft and Associated Equipment	Hard copy	8	Sep 95	Onboard

CIN, COURSE TITLE: C-600-9573, P-3 Integrated Basic Core Organizational Maintenance (Track D-646-1140)
TRAINING ACTIVITY: MTU 1011
LOCATION, UIC : NAMTRAU Jacksonville, 66051

TECHNICAL MANUAL NUMBER / TITLE	MEDIUM	QTY REQD	DATE REQD	STATUS
OPNAVINST 8023.2 (series) Non-Nuclear Ordnance/Explosives Handling Qualification And Certification Program	Hard copy	6	Aug 99	Onboard

CIN, COURSE TITLE: C-646-9571, P-3C Armament/Ordnance System Organizational Maintenance (Track D-646-1140)
TRAINING ACTIVITY: MTU 1011
LOCATION, UIC : NAMTRAU Jacksonville, 66051

TECHNICAL MANUAL NUMBER / TITLE	MEDIUM	QTY REQD	DATE REQD	STATUS
NA 01-75PAA-2-2 Maintenance Instructions Organizational, Airframe Systems, P-3C Aircraft	Hard copy	15	Nov 95	Onboard
NA 01-75PAA-75 Airborne Weapons/Stores Loading Manual, P-3 Aircraft	Hard copy	15	Nov 95	Onboard
NA 01-75PAA-8 Technical Manual, Work Unit Code Manual, P-3 Series	Hard copy	15	Nov 95	Onboard
NA 01-75PAC-2-11 Maintenance Instructions Organizational, Integrated Armament/Ordnance System, P-3C Aircraft	Hard copy	15	Nov 95	Onboard

IV.B.3. TECHNICAL MANUALS

NA 01-75PAC-4-6 Organizational Maintenance with Illustrated Parts Breakdown, Armament Ordnance Station, P-3 Aircraft	Hard copy	15	Nov 95	Onboard

CIN, COURSE TITLE: C-646-1143, P-3 Conventional Weapons Loading Course (Track D-646-1140)
TRAINING ACTIVITY: FASOTRAGRU DET
LOCATION, UIC : NAS Jacksonville, 43620

TECHNICAL MANUAL NUMBER / TITLE	MEDIUM	QTY REQD	DATE REQD	STATUS
OPNAVINST 8023.2 (series) Non-Nuclear Ordnance/Explosives Handling Qualification And Certification Program	Hard copy	6	Apr 99	Onboard

CIN, COURSE TITLE: C-600-9573, P-3 Integrated Basic Core Organizational Maintenance (Track E-646-1140)
TRAINING ACTIVITY: MTU 1012
LOCATION, UIC : NAMTRAU Whidbey Island, 66058

TECHNICAL MANUAL NUMBER / TITLE	MEDIUM	QTY REQD	DATE REQD	STATUS
OPNAVINST 8023.2 (series) Non-Nuclear Ordnance/Explosives Handling Qualification And Certification Program	Hard copy	6	Aug 99	Onboard

CIN, COURSE TITLE: C-646-9571, P-3C Armament/Ordnance System Organizational Maintenance (Track E-646-1140)
TRAINING ACTIVITY: MTU 1012
LOCATION, UIC : NAMTRAU Whidbey Island, 66058

TECHNICAL MANUAL NUMBER / TITLE	MEDIUM	QTY REQD	DATE REQD	STATUS
NA 01-75PAA-2-2 Maintenance Instructions Organizational, Airframe Systems, P-3C Aircraft	Hard copy	15	Nov 95	Onboard
NA 01-75PAA-75 Airborne Weapons/Stores Loading Manual, P-3 Aircraft	Hard copy	15	Nov 95	Onboard
NA 01-75PAA-8 Technical Manual, Work Unit Code Manual, P-3 Series	Hard copy	15	Nov 95	Onboard
NA 01-75PAC-12-6 Crew Station Maintenance Organizational, Armament Ordnance Station, P-3C Aircraft	Hard copy	15	Nov 95	Onboard
NA 01-75PAC-2-11 Maintenance Instructions Organizational, Integrated Armament/Ordnance System, P-3C Aircraft	Hard copy	15	Nov 95	Onboard

IV.B.3. TECHNICAL MANUALS

NA 01-75PAC-4-6 Organizational Maintenance with Illustrated Parts Breakdown, Armament Ordnance Station, P-3 Aircraft	Hard copy	15	Nov 95	Onboard

CIN, COURSE TITLE: C-646-3573, P-3 Conventional Weapons Loading Course (Track E-646-1140)
TRAINING ACTIVITY: MTU 1012
LOCATION, UIC : NAMTRAU Whidbey Island, 66058

TECHNICAL MANUAL NUMBER / TITLE	MEDIUM	QTY REQD	DATE REQD	STATUS
OPNAVINST 8023.2 (series) Non-Nuclear Ordnance/Explosives Handling Qualification And Certification Program	Hard copy	6	Aug 99	Onboard

CIN, COURSE TITLE: C-102-3600, P-3 Aircraft Improvement Program Organization Maintenance Course (Track D-102-6719)
TRAINING ACTIVITY: MTU 1011
LOCATION, UIC : NAMTRAU Jacksonville, 66051

TECHNICAL MANUAL NUMBER / TITLE	MEDIUM	QTY REQD	DATE REQD	STATUS
0002 Material Safety Data Sheet: Isopropyl Alcohol, TT-I-735, or authorized substitute	Hard copy	10	Dec 01	Onboard
0003 Material Safety Data Sheet: Acetone, O-A-51	Hard copy	2	Jun 01	Pending
0004 Material Safety Data Sheet: Aeroshell Grease 22, MIL-G-81	Hard copy	2	Jun 01	Pending
0005 Material Safety Data Sheet: Optical Lens Cleaning Compound, MIL-G-36592	Hard copy	2	Jun 01	Pending
0006 Material Safety Data Sheet: Methyl Alcohol, O-M-232 Grade A	Hard copy	2	Jun 01	Pending
0007 Material Safety Data Sheet: Synthetic Hand Dishwashing Liquid, P-D-410C Type II	Hard copy	2	Jun 01	Pending
0008 Material Safety Data Sheet: Sealant, Dow Corning Silastic 738RTV	Hard copy	2	Jun 01	Pending
0009 Material Safety Data Sheet: Sealant, G.E. RTV 560	Hard copy	2	Jun 01	Pending

IV.B.3. TECHNICAL MANUALS

0010 Material Safety Data Sheet: OSC (AN/AAR-47 Sensors), DOD 6050.5-L, Nickelous Sulfate 6-Hydrate	Hard copy	2	Jun 01	Pending
523-0777257-00121R Rockwell International, Operator's Manual, Control Display Navigation Unit	Hard copy	1	Dec 01	Onboard
CNETINST 1500.20 series Safety Procedures for Conducting Training in Arduous or Potentially High Risk Activities	Hard copy	10	Dec 01	Onboard
DOD-HDBK-263 Electrostatic Discharge Control Handbook	Hard copy	10	Dec 01	Onboard
DOD-SSTD 1686 Electrostatic Discharge Control Program	Hard copy	10	Dec 01	Onboard
Grimes Aerospace, Model 400 Maintenance Manual with Illustrated Parts Breakdown, Pilot Color High Resolution Display (PCHRD)	Hard copy	2	Jun 01	Pending
HG05-EG85 P-3C Interim RADAR System Operator's Manual, P-3C ISAR AN/APS-137(V)2	Hard copy	10	Sep 95	Onboard
Interim User Manual AN/USQ-131 Interim Memory Loader Verifier User Manual	Hard copy	2	Jun 01	Pending
NA 01-1A-23 Technical Manual, Standard Maintenance Practices Electronic Assembly Repair	Hard copy	10	Dec 01	Onboard
NA 01-75PA-75 Airborne Weapons/Stores Loading Manual, P-3 Aircraft	Hard copy	2	Jun 01	Pending
NA 01-75PA-8 Technical Manual, Work Unit Code Manual, P-3 AIP Aircraft	Hard copy	2	Jun 01	Pending
NA 01-75PAA-2-15 Technical Manual, Organizational Maintenance, Connector and Wire Repair Procedures, P-3A/B/C and EP-3E Aircraft	Hard copy	1	Dec 01	Onboard
NA 01-75PAA-2-19 Maintenance Instructions, Organizational, Transmission Line Testing, P-3A/B/C Aircraft	Hard copy	10	Dec 01	Onboard

IV.B.3. TECHNICAL MANUALS

NA 01-75PAA-6-1 Preflight/Turnaround Checklist, P-3C Aircraft	Hard copy	2	Jun 01	Pending
NA 01-75PAA-6-3 Daily/Servicing/Special/Conditional Inspections, P-3A/B/C Aircraft	Hard copy	2	Jun 01	Pending
NA 01-75PAC-1.1 NFO/Aircrew NATOPS Flight Manual, P-3C Aircraft	Hard copy	10	Sep 01	Onboard
NA 01-75PAC-75-22 Chaff Cartridges Conventional Weapons Checklist	Hard copy	2	Jun 01	Pending
NA 01-75PAC-75-22A1X Conventional Weapons Checklist, P-3C ECM AN/ALE-47 2	Hard copy	2	Jun 01	Pending
NA 01-75PAI-11-6-15 Software Reference Manual, Tactical Coordinator, Navigator Communicator and Inflight Technician, A4.7.A3, P-3C AIP Aircraft	Hard copy	20	Jun 01	Pending
NA 01-75PAI-11-6-16 Tactical Coordinator, Navigator Communicator and Inflight Technician, A4.7.A1, P-3C AIP Aircraft	Hard copy	20	Jun 01	Pending
NA 01-75PAI-11-6-18 Inflight Handbook, Sensor Station 3, A4.7.A3, P-3C AIP Aircraft	Hard copy	20	Jun 01	Pending
NA 01-75PAI-11-6-20 Inflight Handbook, Pilot, A4.7.A3, P-3C AIP Aircraft	Hard copy	20	Jun 01	Pending
NA 01-75PAI-11-6-5 Inflight Handbook, Sensor Station 1 and 2, AN/USQ-78, A4.7.A3, P-3 AIP Aircraft	Hard copy	20	Jun 01	Pending
NA 01-75PAI-12 Crew Station Maintenance Organizational, Technician Station, P-3C AIP Aircraft	Hard copy	2	Jun 01	Pending
NA 01-75PAI-12-1 Crew Station Maintenance Organizational, Flight Station, P-3C AIP Aircraft	Hard copy	20	Jun 01	Pending
NA 01-75PAI-12-10 Crew Station Maintenance Organizational, System Test Program CP-2339/ASQ-222V Station, P-3C AIP Aircraft	Hard copy	20	Jun 01	Pending
NA 01-75PAI-12-2 Crew Station Maintenance Organizational, Tactical Coordinator Station, P-3C AIP Aircraft	Hard copy	20	Jun 01	Pending

IV.B.3. TECHNICAL MANUALS

NA 01-75PAI-12-3 Crew Station Maintenance Organizational, Navigation/Communication Station, P-3C AIP Aircraft	Hard copy	20	Jun 01	Pending
NA 01-75PAI-12-5 Crew Station Maintenance Organizational, Sensor Station 3, P-3C AIP Aircraft	Hard copy	20	Jun 01	Pending
NA 01-75PAI-12-6 Crew Station Maintenance Organizational, Armament Ordnance Station, P-3C AIP Aircraft	Hard copy	20	Jun 01	Pending
NA 01-75PAI-12-8 Crew Station Maintenance Organizational, Sensor Station 1 and 2 Update III, P-3C AIP Aircraft	Hard copy	20	Jun 01	Pending
NA 01-75PAI-12-9 Crew Station Maintenance Organizational, System Test Program for Advanced Signal Processor	Hard copy	20	Jun 01	Pending
NA 01-75PAI-2-10 Maintenance Instructions Organizational, Navigation/Communication Station, P-3C AIP Aircraft	Hard copy	20	Jun 01	Pending
NA 01-75PAI-2-11 Maintenance Instructions Organizational, Integrated Ordnance Station, P-3C AIP Aircraft	Hard copy	20	Jun 01	Pending
NA 01-75PAI-2-15 Maintenance Instructions Organizational, Integrated SS1/2 (SASP), P-3C AIP Aircraft	Hard copy	20	Jun 01	Pending
NA 01-75PAI-2-2 Maintenance Instructions, P-3C AIP Aircraft	Hard copy	2	Jun 01	Pending
NA 01-75PAI-2-5 Maintenance Instructions Organizational Integrated Technician, P-3C AIP Aircraft	Hard copy	20	Jun 01	Pending
NA 01-75PAI-2-6 Maintenance Instructions Organizational Integrated TACCO Station, P-3C AIP Aircraft	Hard copy	20	Jun 01	Pending
NA 01-75PAI-2-8 Maintenance Instructions Organizational, Integrated SS3 Station, P-3C AIP Aircraft	Hard copy	20	Jun 01	Pending

IV.B.3. TECHNICAL MANUALS

NA 01-75PAI-2-9 Maintenance Instructions Organizational Integrated Flight Station, P-3C AIP Aircraft	Hard copy	20	Jun 01	Pending
NA 16-30AAR-47-1 Intermediate Maintenance with Illustrated Parts Breakdown, Missile Warning Set AN/AAR-47	Hard copy	20	Jun 01	Pending
NA 16-30ALE47-1 Intermediate Maintenance with Illustrated Parts Breakdown, Countermeasures Dispensing System AN/ALE-47	Hard copy	20	Jun 01	Pending
NA 16-30ALM-286-1 Intermediate Maintenance with Illustrated Parts Breakdown, Countermeasures Chaff Dispensing Set Test Set Group	Hard copy	2	Jun 01	Pending
NA 16-30ARN151-1 Operational and Maintenance Instruction Organizational, AN/ARN-151 (V)	Hard copy	20	Jun 01	Pending
NA 16-30ASQ222-1 Organizational Maintenance, Digital Computer Set, AN/ASQ-222	Hard copy	20	Dec 01	Pending
NA 16-30USQ131-1 Operational and Organizational Maintenance Instruction with Illustrated Parts Breakdown, Memory Loader Verifier Set AN/USQ-131	Hard copy	2	Jun 01	Pending
NA 16-35MX10667-1 Operational and Organizational Maintenance Instruction with Illustrated Parts Breakdown	Hard copy	10	Jun 01	Pending
NA 19-600-99-6-1 Preoperational Checklist Manual, Bomb Hoist, AERO-14C	Hard copy	10	Jun 01	Onboard
NA 19-600-99-6-2 Technical Manual, Periodic Maintenance Requirements Manual, Manual Bomb Hoist, AERO-14C	Hard copy	10	Jun 01	Onboard
OPNAVINST 5100.19C Navy Occupational Safety and Health Program Manual for Forces Afloat (Volume I)	Hard copy	1	Dec 01	Onboard
OPNAVINST 5100.23C Navy Occupational Safety & Health Program Manual	Hard copy	1	Dec 01	Onboard

IV.B.3. TECHNICAL MANUALS

TM 114268-900 Operational and Maintenance Instructions for Thermal Printer/Plotter PT-540 (V) 7/U	Hard copy	20	Jun 01	Pending
V598610-08 Technical Manual, BARCO Multi Purpose Rugged Color Display, MPRD	Hard copy	2	Jun 01	Pending

PART V - MPT MILESTONES

COG CODE	MPT MILESTONES	DATE	STATUS
PDA	Conducted Navy Technical Evaluation	Aug 81	Completed
PDA	Performed analysis of MPT requirements	Aug 81	Completed
OPTEVFOR	Conducted Operational Test and Evaluation	Jan 82	Completed
PDA	Awarded production contract	Jul 82	Completed
TSA	Awarded factory training and curriculum contract	Nov 82	Completed
PDA	Moved production aircraft to AT-50	Mar 84	Completed
PDA	Delivered production aircraft to VP-31	Jul 84	Completed
EPMAC	Requisitioned enlisted personnel	Dec 84	Completed
TSA	Began follow-on training at VP-31	Jan 85	Completed
TSA	Began west coast transition training	Aug 85	Completed
PDA	Delivered nine P-3C Update III aircraft to first west coast squadron, VP-40	Apr 86	Completed
PDA	Achieved MSD for P-3C Update III	FY 86	Completed
TSA	Began training VP-30 instructors	Jan 87	Completed
TSA	Began follow-on training at VP-30	Jun 87	Completed
TSA/NADC	Conducted CHEX factory training	Mar 88	Completed
OPTEVFOR	Conducted CHEX Operational Test and Evaluation	Jun 88	Completed
PDA	Delivered nine P-3C Update III aircraft to first east coast squadron	Aug 88	Completed
PDA	Retrofitted CHEX Update into all Update III aircraft	Aug 89	Completed
OPTEVFOR	Conducted CP-2044, ASQ-212 Test and Evaluation	Sep 92	Completed
ACNO	Promulgated updated NTP	May 93	Completed
ACNO	Chaired NTPC	Sep 93	Completed
TSA	Began retrofit of Training Devices for the P-3C Update III	Dec 93	Completed

COG CODE	MPT MILESTONES	DATE	STATUS
TSA	Began training at MTU 1012 NAS Whidbey Island	Jan 94	Completed
TSA	Began training at MTU 1012 NAS Moffett Field	Jul 94	Completed
PDA	Awarded P-3C Update III AIP contract	Sep 94	Completed
OPTEVFOR	Began P-3C Update III AIP FOT&E training	Mar 96	Completed
TSA	Began P-3C Update III AIP Cadre training	Jan 97	Completed
TSA	Began P-3C Update III AIP initial training for VP-30 instructor personnel	Jan 97	Completed
DA	Distributed updated Draft NTSP for review	May 97	Completed
OPO	Approved and promulgated NTSP	Nov 97	Completed
PDA	Began P-3C Update III AIP aircraft delivery to the Fleet	FY 98	Completed
TSA	Began P-3C Update III AIP Transition Training	FY 98	Completed
TSA	Delivered Tactical Aircrew Coordination Trainer (PACT)	Jan 00	Completed
OPTEVFOR	Conducted BMUP Operational Test and Evaluation	Feb 01	Completed
TSA	Develop draft NTSP	Mar 01	Completed
TSA	Begin retrofit of Training Devices for the P-3C AIP aircraft	FY 01	In work
TSA	Deliver P-3C Update III AIP curriculum materials	FY 01	In work
TSA	Deliver P-3C Update III AIP Follow-on Training	FY 01	In work
NAVICP	Projected P-3C Update III AIP MSD	Nov 01	Pending

PART VI - DECISION ITEMS / ACTION REQUIRED

DECISION ITEM OR ACTION REQUIRED	COMMAND	DUE DATE	STATUS
Build AIP IAT for delivery to NAMTRAU Jacksonville.	PMA205	Mar 03	In progress.
Decide on whether to single site AIP training at Jacksonville or plan for a second AIP IAT at Whidbey Island.	P-3 OAG	May 02	Pending
Decide on future course of P-3 Avionics training and 8819, 8319, and 6719 NECs.	P-3 OAG	May 02	Pending
Decide on how AIP trained AT billet requirements (currently AT 6719) are best incorporated into squadron AMDs.	P-3 OAG	May 02	Pending

PART VII - POINTS OF CONTACT

NAME / FUNCTION / ACTIVITY, CODE / INTERNET	TELEPHONE NUMBERS
CAPT John Chase Deputy Aviation Maintenance Programs CNO, N781B john.chase@navy.mil	**COMM:** (703) 604-7747 **DSN:** 664-7747 **FAX:** (703) 604-6972
CDR Wanda Janus Resource Sponsor / Program Sponsor CNO, N785D1/E1 wanda.janus@navy.mil	**COMM:** (703) 614-3375 **DSN:** 224-3375 **FAX:** (703) 695-3066
LCDR Gregory S. Clark Pilot Training Requirements CNO, N789F2 gregory.s.clark@navy.mil	**COMM:** (703) 604-7766 **DSN:** 664-7766 **FAX:** (703) 604-6939
AWCM James Cook Navy Aircrew Training Requirements CNO, N789F7 james.cook@navy.mil	**COMM:** (703) 604-7721 **DSN:** 664-7721 **FAX:** (703) 604-6393
AZCS Gary Greenlee NTSP Manager CNO, N789H7 gary.greenlee@navy.mil	**COMM:** (703) 604-7709 **DSN:** 664-7709 **FAX:** (703) 604-6939
LCDR Jim Arend Aviation Manpower CNO, N122C1C n122c1c@bupers.navy.mil	**COMM:** (703) 695-3223 **DSN:** 225-3223 **FAX:** (703) 614-5308
CAPT David Mahoney Head, Reserve Air Logistics Programs CNO, N0955F david.mahoney@navy.mil	**COMM:** (703) 601-1872 **DSN:** 329-1872 **FAX:** (703) 601-0561
CAPT Terry Merritt Director, Professional Development Division CNO, N789H terry.merritt@navy.mil	**COMM:** (703) 602-5172 **DSN:** 227-5172 **FAX:** (703) 602-5175
Mr. Robert Zweibel Human Performance and Acquisition Assessment Division CNO, N00T46 robert.zweibel@navy.mil	**COMM:** (703) 602-5151 **DSN:** 332-5151 **FAX:** (703) 602-5175

NAME / FUNCTION / ACTIVITY, CODE / INTERNET	TELEPHONE NUMBERS
CAPT George Hill Program Manager, Maritime Surveillance Aircraft PEO(A), PMA290 hillgc@navair.navy.mil	**COMM:** (301) 757-5703 **DSN:** 757-5703 **FAX:** (301) 757-5688
Mr. Tom Pillion Director, P-3 MSA International (FMS) NAVAIR, PMA290F pillontj@navair.navy.mil	**COMM:** (301) 757-5696 **DSN:** 757-5696 **FAX:**
CDR Mike Smith Deputy Program Manager, P-3 Update III NAVAIR, PMA290D2 smithmd2@navair.navy.mil	**COMM:** (301) 757-5655 **DSN:** 757-5655 **FAX:** (301) 757-6945
CDR Jim Hoke Deputy Program Manager, P-3 AIP NAVAIR, PMA290D3 hokejb@navair.navy.mil	**COMM:** (301) 757-5650 **DSN:** 757-5650 **FAX:** (301) 757-5688
CDR Steven Wright Deputy Program Manager, P-3 Sustainment Program NAVAIR, PMA290D5 wrightsr@navair.navy.mil	**COMM:** (301) 757-5619 **DSN:** 757-5619 **FAX:** (301) 757-5688
LCDR Eric Hendrickson Assistant Program Manager, P-3 Training Systems NAVAIR, PMA205-2F hendricksone@navair.navy.mil	**COMM:** (301) 757-8147 **DSN:** 757-8147 **FAX:** (301) 757-6945
Mr. Robert E. Young Deputy Assistant Program Manager, P-3 Training Systems NAVAIR, PMA205-2F1 youngre@navair.navy.mil	**COMM:** (301) 757-8146 **DSN:** 757-8146 **FAX:** (301) 757-6945
CDR Tim Boothe Assistant Program Manager for Logistics, P-3 Program NAVAIR, 3.1.2M boothete@navair.navy.mil	**COMM:** (301) 757-5644 **DSN:** 757-5644 **FAX:** (301) 757-5688
LCDR Fitzgerald Britton P-3 Block Modification Update Program NAVAIR, 3.1.2M brittonf@navair.navy.mil	**COMM:** (301) 757-6741 **DSN:** 757-6741 **FAX:** (301) 757-5688
Mr. Mark VanReken Assistant Program Manager for Logistics, P-3C AIP NAWCAD PAX, 3.1.2M vanrekenmh@navair.navy.mil	**COMM:** (301) 757-5647 **DSN:** 757-5647 **FAX:** (301) 757-5688

NAME / FUNCTION / ACTIVITY, CODE / INTERNET	TELEPHONE NUMBERS
Mr. Kel Collins Deputy Assistant Program Manager for Logistics, P-3 ASW Program NAVAIR, 3.1.2M collinskc@navair.navy.mil	**COMM:** (301) 757-5631 **DSN:** 757-5631 **FAX:** (301) 757-5979
CDR Dan Crain Assistant Program Manager, P-3C Systems Engineering NAVAIR, AIR 4.1.1.3 / PMA290DE crainpd@navair.navy.mil	**COMM:** (301) 342-0193 **DSN:** 342-0193 **FAX:** (301) 757-5688
Mr. Doug Bellis Project Officer, P-3 Avionics Systems NAVAIR, AIR 4.5.1.1 bellisdc@navair.navy.mil	**COMM:** (301) 757-5651 **DSN:** 757-5651 **FAX:** (301) 757-5688
Mr. Mark Zlomke Lead, P-3C Update III Test Team NAWCAD PAX, AIR 4.1.1.6.4 zlomkem@navair.navy.mil	**COMM:** (301) 342-2274 **DSN:** 342-2274 **FAX:** (301) 342-2301
Mr. Ken Rice Logistics Management Specialist, P-3 Programs NAWCAD PAX, 3.4.1 ricekr@navair.navy.mil	**COMM:** (301) 342-7702 **DSN:** 342-7702 **FAX:** (301) 342-7712
AZCM Kevin Green AMTCS Training Systems Manager NAVAIR, PMA205B1 greenkl@navair.navy.mil	**COMM:** (301) 757-8120 **DSN:** 757-8120 **FAX:** (301) 757-6941
LCDR Henry Barnes Aircrew Training Officer COMPATRECONFORLANT, N71 barneshw@hq.sublant.navy.mil	**COMM:** (757) 836-6985 **DSN:** 836-6985 **FAX:** (757) 836-6658
CDR Mike Hohl Aviation NTSP Point of Contact COMLANTFLT, N731 hohlmj@clf.navy.mil	**COMM:** (757) 836-0085 **DSN:** 836-0085 **FAX:** (757) 836-6794
CAPT Pat Salsman Branch Head, Training Requirements and Assessments COMLANTFLT, N72 salsmancp@clf.navy.mil	**COMM:** (757) 836-6495 **DSN:** 863-6495 **FAX:** (757) 836-6737
Mr. Bob Long Deputy Director for Training COMPACFLT, N70 longrh@cpf.navy.mil	**COMM:** (808) 471-8513 **DSN:** 471-8513 **FAX:** (808) 471-8596

NAME / FUNCTION / ACTIVITY, CODE / INTERNET	TELEPHONE NUMBERS
CDR T. D. Smyers VP Reserve Program Manager COMNAVAIRESFOR, N35 AIRN35@cnrf.nola.navy.mil	**COMM:** (504) 678-1393 **DSN:** 678-1393 **FAX:** (504) 678-1466
AMCS Jim Weaver P-3 Class Desk Manager COMNAVAIRESFOR, N385 weaverj@cnrf.navy.mil	**COMM:** (504) 678-5963 **DSN:** 678-5963 **FAX:** (504) 678-1466
CAPT Robert Holland Deputy Assistant, Chief of Naval Personnel for Distribution NAVPERSCOM, PERS-4B p4b@persnet.navy.mil	**COMM:** (901) 874-3529 **DSN:** 882-3529 **FAX:** (901) 874-2606
CDR Dave Nelson Branch Head, Aviation Enlisted Assignments NAVPERSCOM, PERS-404 p404@persnet.navy.mil	**COMM:** (901) 874-3691 **DSN:** 882-3691 **FAX:** (901) 874-2642
CDR Rose Wynne Aviation Department Head NAVMAC, 30 rosemary.wynne@navy.mil	**COMM:** (901) 874-6218 **DSN:** 882-6218 **FAX:** (901) 874-6471
LCDR Larry Rankin Squadron Manpower Documents Division Officer NAVMAC, 31 rankinl@navmac.navy.mil	**COMM:** (901) 874-6220 **DSN:** 882-6220 **FAX:** (901) 874-6471
ATCS Anthony Malenky NTSP Coordinator NAVMAC, 32 anthony.malenky@navy.mil	**COMM:** (901) 874-6434 **DSN:** 882-6434 **FAX:** (901) 874-6471
Ms. Susan Webb NTSP Coordinator NAVMAC, 30 susan.webb@navy.mil	**COMM:** (901) 874-6242 **DSN:** 882-6242 **FAX:** (901) 874-6471
Mr. Steve Berk NTSP Distribution NETC, ETS-23 stephen-g.berk@cnet.navy.mil	**COMM:** (850) 452-8919 **DSN:** 922-8919 **FAX:** (850) 452-4853

NAME / FUNCTION / ACTIVITY, CODE / INTERNET	TELEPHONE NUMBERS
CDR Janey Wiley Functional Integration Directorate CNATT, N51 cdr-janet.wiley@cnet.navy.mil	**COMM:** (850) 452-7146 **DSN:** 922-7146 **FAX:** (850) 452-7149
MAJ Robert J. Turpin, USMC Center for Naval Aviation Technical Training (CNATT) Functional Integration Directorate (FID), N55 maj-robert.turpin@cnet.navy.mil	**COMM:** (850) 452-7147 **DSN:** 922-7147 **FAX:** (850) 452-7149
MMC Eliut Lopez PQS Development Group LCPO NETPDTC, N741 mmc-eliut.lopez@cnet.navy.mil	**COMM:** (850) 452-1001 ext. 2214 **DSN:** 922-1001 ext. 2214 **FAX:** (850) 452-1764
ATCS Mark Butler P-3 Training Coordinator NAMTRAGRU HQ, N2113 atcs-mark.a.butler@cnet.navy.mil	**COMM:** (850) 452-9710 ext. 235 **DSN:** 922-9710 ext. 235 **FAX:** (850) 452-9962
ATCS Robert Doyle Training Coordinator, CASS ATE NAMTRAGRU HQ, N2213 atcs-robert.doyle@cnet.navy.mil	**COMM:** (850) 452-9708 ext. 246 **DSN:** 922-9708 ext. 246 **FAX:** (850) 452-9965
OSCS Christopher Adams PQS Development Group LCPO NETPDTC, N741 oscs-christopher.adams@cnet.navy.mil	**COMM:** (850) 452-1001 ext. 2238 **DSN:** 922-1001 ext. 2238 **FAX:** (850) 452-1764
Mr. Carol Kloster P-3 Technical Publications NATEC, 3.3 klostercj@natec.navy.mil	**COMM:** (619) 545-3540 **DSN:** 735-3540 **FAX:** (619) 545-1883
CDR Perry Yaw Wing 2 ACOS for Training COMPATRECONFORPAC, N7 yawpd@cprfp.navy.mil	**COMM:** (808) 257-0313 **DSN:** 457-0313 **FAX:** (808) 257-0343
LCDR Scott Askins Wing 10 Fleet Training Officer CPRW10, N7 askinss@naswi.navy.mil	**COMM:** (360) 257-6853 **DSN:** 820-6583 **FAX:** (360) 257-4333
CDR Todd Fox Wing 5 Training Officer CPRW5, N7 foxt@cpw5.navy.mil	**COMM:** (207) 921-2143 **DSN:** 476-2143 **FAX:** (207) 921-2970
LCDR Mike Huff Wing 11 Training Officer CPRW11, N7 huffmt@cprw11.navy.mil	**COMM:** (904) 542-2179 ext. 132 **DSN:** 942-2179 ext. 132 **FAX:** (904) 542-4057

NAME / FUNCTION / ACTIVITY, CODE / INTERNET	TELEPHONE NUMBERS
LCDR Lance Scott P-3 Fleet Project Team Officer VP-30, scottlg@vp30.navy.mil	**COMM:** (904) 542-4131 **DSN:** 942-4131 **FAX:** (904) 542-8101
LCDR Steven M. Carlisle VP-30 Training Officer VP-30, carlislesm@vp30.navy.mil	**COMM:** (904) 542-5329 **DSN:** 942-5329 **FAX:** (904) 542-5319
LCDR Brett W. Coffey VP-30 Training Officer, Asst. VP-30, coffeybw@vp30.navy.mil	**COMM:** (904) 542-3078 **DSN:** 942-3078 **FAX:** (904) 542-5319
LCDR Rick Lawson NTSP Manager COMOPTEVFOR, 533 lawsonr@cotg.navy.mil	**COMM:** (804) 444-5087 ext. 3354 **DSN:** 564-5087 ext. 3354 **FAX:** (757) 444-3820
CAPT(sel) Fred E. Smith Assistant Chief of Staff for Training and Readiness COMPATRECONFORPAC, N7 smithfe@cprfp.navy.mil	**COMM:** (808) 257-0313 **DSN:** 457-0313 **FAX:** (808) 257-0335
CDR Jim Brown VP Readiness Officer COMPATRECONFORPAC, N72 brownjm@cpwp.navy.mil	**COMM:** (808) 257-0509 ext. 8711 **DSN:** 457-0509 ext. 8711 **FAX:** (808) 257-0335
Mr. Phil Szczyglowski Competency Manager NAVAIR, AIR 3.4.1 szczyglowspr@navair.navy.mil	**COMM:** (301) 757-8280 **DSN:** 757-8280 **FAX:** (301) 342-7737
Mr. Bob Kresge NTSP Manager NAVAIR, AIR 3.4.1 kresgerj@navair.navy.mil	**COMM:** (301) 757-1844 **DSN:** 757-1844 **FAX:** (301) 342-7737
ATCS Jeff Hall NTSP Coordinator NAVAIR, AIR 3.4.1 reedps@navair.navy.mil	**COMM:** (301) 757-3109 **DSN:** 757-3109 **FAX:** (301) 342-7737
ATC Jeff Rocheteau NTSP Analyst NAVAIR, AIR 3.4.1.1 rocheteaurj@navair.navy.mil	**COMM:** (301) 757-8292 **DSN:** 757-8292 **FAX:** (301) 342-7737